INTERNATIONAL CRYSTAL MANUFACTURING CO., INC.
18 North Lee, Oklahoma City, Oklahoma 73102

INTERNATIONAL

precision made
crystals
& equipment

Printed in U.S.A.

INTERNATIONAL CATALOG

INTERNATIONAL

precision made
crystals
& equipment

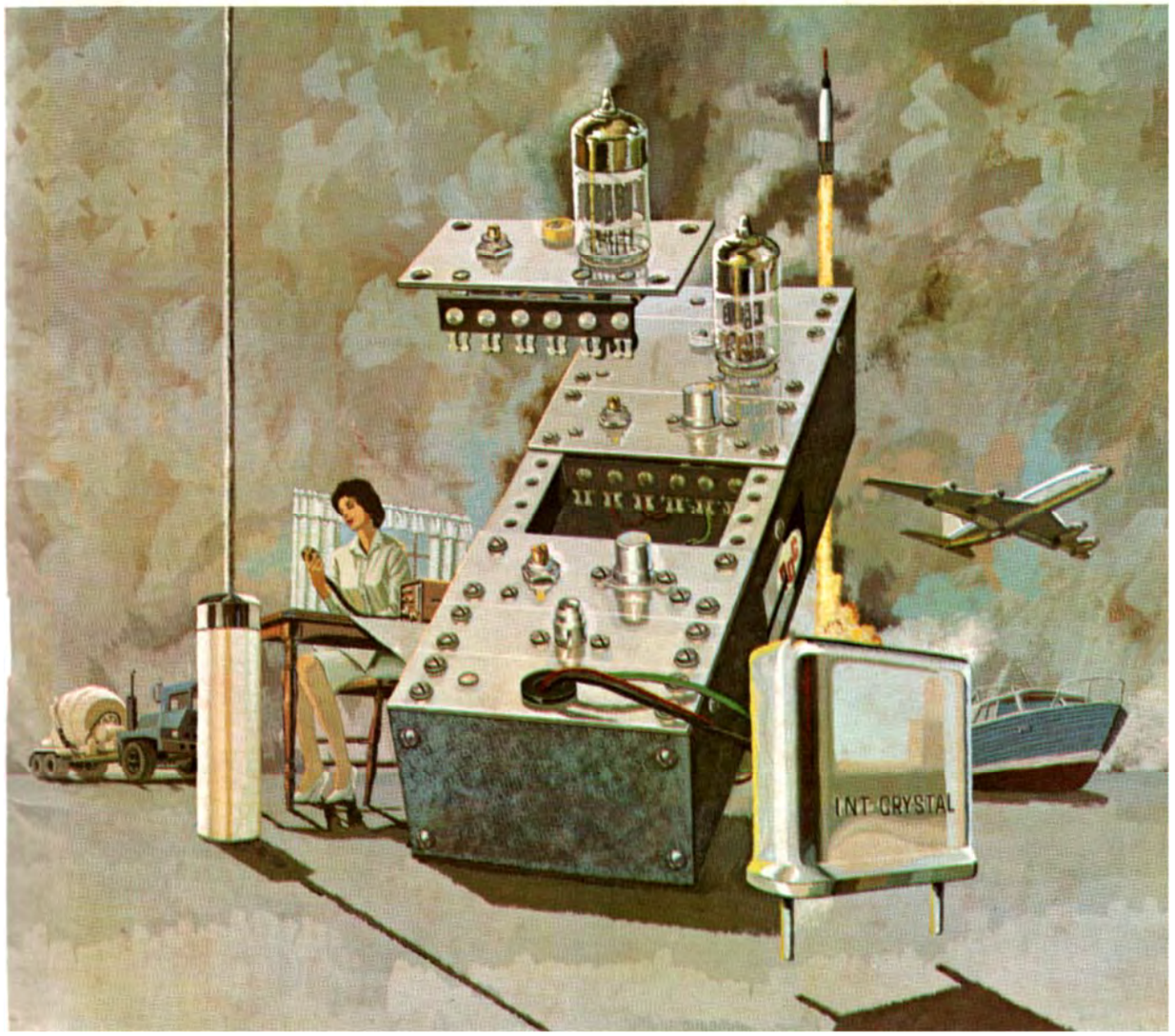

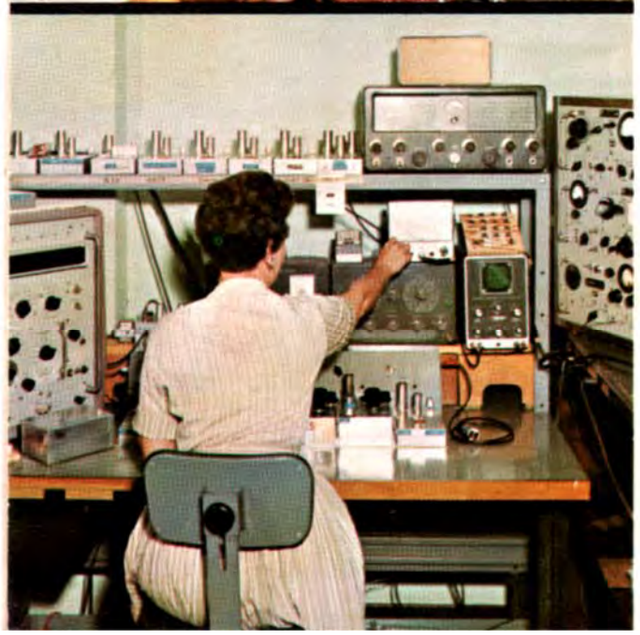

INTERNATIONAL Crystal Manufacturing Co., Inc., is the manufacturer of precision electronic products for the home, industry and aerospace needs. Administrative offices and manufacturing operations are located in Oklahoma City, Oklahoma. Organized in the late 1940's as a primary manufacturer of high quality precision crystals for frequency control, the company has expanded and diversified its operations. Today, International Crystal also manufactures specialized equipment, including oscillators, multivibrators, frequency meters, alignment oscillators, transmitters, sideband filters, antennas, etc. **International Crystal is a pioneer in the design and manufacture of transceivers for the Citizens Radio service.**

International Crystals are manufactured to rigid specifications in a plant where temperature and dust control are two important factors. Every crystal that leaves our plant is subject to many tests that assure the customer of the very best product available. All International crystals are guaranteed for the life of the crystal, subject to certain restrictions under warranty. **Every International crystal or instrument is made to give long life and reliable performance.**

International sells all of its manufactured products direct with the exception of Citizens Radio transceivers and accessories which are sold through dealers and distributors.

New products are marketed only after they have been subjected to a long series of engineering tests.

Customers who are in need of specialized instruments for frequency control are invited to consult us on the design and manufacture of these items.

All International products are guaranteed to meet and exceed specifications as set forth in this catalog.

© 1965 International Crystal Mfg. Co., Inc.
Oklahoma City, Oklahoma

INTERNATIONAL

arrangement of catalog

Page
How To Order 4, 5, 6, 7, 8
Technical Data, Crystals 9, 10
Commercial Crystals 11
Typical Circuits, Crystals 12
Specialized & Miniature Crystals 13
Crystal Ovens 14
Amateur Crystals 15
Plug-In Transistor Oscillators 16, 17
Citizens Band Crystals 18
Accessories 19
Frequency Meters & Alignment Oscillators 20, 21, 22, 23, 24, 25
Transistor Multivibrators 26, 27
AOC Multivibrators 28, 29
Single Sideband Filters 30
Transmitters/Exciters 31
VHF/UHF Transmitters 32, 33
Transistor Subassemblies 34, 35
AOC Information 36
Audio Amplifier 37
Converters 38
IF Amplifiers, Detectors 39
Power Supplies 40
Voltmeter 41
AOC Subassemblies
- Amplifier, Audio Power 42
- Amplifier, Audio Voltage 42
- Amplifier, RF Power 42
- Amplifier, RF Voltage 42
- Cables 42
- Cables, Power Harness 43
- Capacitors, Variable 43
- Cases 43
- Coil Kit 44
- Coils 44
- Control, Volume 45
- Crystals 45
- Detectors 45
- Hardware 45
- Limiter, RF Voltage 46
- Modulator 46
- Mixers 46
- Multipliers 46
- Multivibrators 47
- Oscillators, Crystal 47
- Ovens, Crystal 48
- Plates 48
- Potentiometer 48
- Regulator, Voltage 49
- Squelch, Audio Amplifier 49
- Terminals 49
- Transformers, Audio 50
- Transformers, IF 50

Citizens Radio 51, 52
Citizens Radio Transceivers 53, 54, 55, 56, 57
Citizens Radio Accessories 58
Citizens Radio Antennas 59

INTERNATIONAL

how to order

International Crystal Mfg. Co., Inc. plant and offices are located in Oklahoma City, Oklahoma. Orders should be placed directly with the Oklahoma City sales office. Orders may be placed by mail, phone, wire, cable or teletype. Office hours are 8:00 a.m. to 4:30 p.m. C.S.T. Monday thru Friday excepting holidays.

Mail: International Crystal Mfg. Co., Inc.
18 North Lee
Oklahoma City, Oklahoma 73102

Phone: Area Code 405
CEntral 6-3741

Western Union: FLJ

Cable: INCRYSTAL

Bell System TWX: 405-239-4348

Orders mailed to confirm phone or wire orders must be clearly marked CONFIRMING. International will not be responsible for duplicate shipments made on such orders and not marked CONFIRMING.

Phone and wire orders will be processed on information as received and understood. Where the confirming order differs from the original phone or wire order, the original order received by phone or wire will take precedence.

CRYSTALS

In order to give the fastest possible service crystals are sold direct and are not handled by any jobber.

In order to assure accuracy and prompt delivery of crystals for commercial applications, we suggest that the customer provide the following information when ordering or requesting quotations.

If you are ordering crystals for existing commercial equipment the order should include MODEL, TYPE NUMBER and MANUFACTURER, OPERATING FREQUENCY, CRYSTAL FREQUENCY, and whether the crystal is for OVEN or NON-OVEN operation.

When no reference to equipment is known the customer should provide the CRYSTAL FREQUENCY, HOLDER TYPE, OPERATING TEMPERATURE, FREQUENCY TOLERANCE, and FREQUENCY STABILITY. Customer should specify oscillator load capacitance or furnish a copy of oscillator circuit. When the crystal frequency is specified, the customer should indicate whether or not he desires a check of his calculations.

Space prohibits us from listing detailed information required for all makes of commercial equipment. We list the following manufacturers as a guide to specific information required.

CRYSTALS FOR COMMUNICATIONS COMPANY EQUIPMENT should specify Comco part number as well as crystal frequency. Indicate whether the crystal is for oven or non-oven use.

CRYSTAL ORDERS FOR GENERAL ELECTRIC EQUIPMENT should specify the model number of transmitter and receiver RF decks. Example: 4ES13A, 4ER24BI, 4ET5B3, etc. For 450 mc equipment specify (1) whether transmitter crystals are oven or non-oven. (2) For receiver crystals (450 mc) specify if they are oven or non-oven, if the unit is AFC or non-AFC, and the platter number of the present receiver deck.

CRYSTALS FOR MOTOROLA EQUIPMENT can only be properly correlated if the crystal type number is given. Example: DO2, R28, DO3, etc. In cases where the crystal is required for type D-14, 800 and 801 holders, always specify the crystal frequency or the high IF frequency. Check whether the crystal is to be used in ovens.

INFORMATION FOR RCA EQUIPMENT should include the model number or MI number of the crystal. Always indicate whether the crystal is to be oven or non-oven type.

For other commercial equipment specify the model number of the receiver and transmitter as well as any formulae that pertains to the correct crystal calculation.

REMEMBER . . . just any crystal will not work properly in every make of commercial equipment. International Crystal Manufacturing Co., will furnish equivalent crystals to meet specifications set forth by the manufacturers of commercial two-way radio equipment.

EQUIPMENT

All items should be ordered by CATALOG NUMBER. Normally it will be necessary to list the desired operating frequencies, eg: on converters — the incoming signal frequency and the desired output frequency IF desired. Frequency meter orders require the channel frequency being measured and switch position desired. Most equipment will require 10 days processing time for crystal and tune-up on the customers specific frequency. Items not requiring this work will be shipped from stock.

CITIZEN RADIO EQUIPMENT

Citizens Radio transceivers are the only item manufactured by International sold through dealers. Equipment for this use may be ordered direct, however we recommend the customer purchase through a local dealer if one is available. The local dealer can supply installation and service on the units where needed. International will be glad to supply the name of the nearest dealer upon request.

TERMS

All shipments are made FOB our Oklahoma City plant. Cash should accompany the order unless prior credit has been arranged. Include sufficient remittance to cover shipping costs. Open account shipments are net 30 days from date of invoice unless otherwise noted. All orders received with insufficient remittance will be returned unless a statement is included with the order giving permission to ship balance COD. All COD orders of $15.00 or more require ¼ deposit with order.

COD orders shipped and refused by the customer for whatever reason will be held 15 days for the customer to forward his remittance. After that period it will be necessary to place a new order on a cash-with-order basis.

PARCEL POST RATE TABLE

Ship. Wt.	Local	Zones 1 & 2	Zone 3	Zone 4	Zone 5	Zone 6	Zone 7	Zone 8
2 lbs.	$.29	$.40	$.42	$.46	$.52	$.59	$.66	$.72
3 lbs.	.31	.46	.49	.55	.64	.73	.83	.93
4 lbs.	.33	.51	.55	.64	.75	.88	1.01	1.13
5 lbs.	.35	.57	.62	.72	.87	1.02	1.18	1.34
6 lbs.	.37	.62	.68	.80	.97	1.15	1.34	1.53
7 lbs.	.39	.68	.75	.88	1.07	1.28	1.50	1.73
8 lbs.	.41	.73	.81	.95	1.18	1.41	1.66	1.92
9 lbs.	.43	.78	.87	1.03	1.28	1.53	1.82	2.12
10 lbs.	.45	.83	.93	1.10	1.38	1.66	1.98	2.31
11 lbs.	.47	.88	1.00	1.18	1.48	1.78	2.14	2.48
12 lbs.	.49	.93	1.06	1.26	1.58	1.90	2.29	2.66
13 lbs.	.51	.98	1.12	1.33	1.69	2.02	2.44	2.83
14 lbs.	.53	1.03	1.18	1.41	1.79	2.14	2.60	3.01
15 lbs.	.55	1.08	1.24	1.48	1.89	2.25	2.75	3.18
16 lbs.	.57	1.13	1.30	1.56	1.99	2.37	2.90	3.36
17 lbs.	.59	1.18	1.36	1.64	2.09	2.49	3.06	3.53
18 lbs.	.61	1.23	1.42	1.71	2.20	2.61	3.21	3.71
19 lbs.	.63	1.28	1.48	1.79	2.30	2.73	3.36	3.88
20 lbs.	.65	1.32	1.54	1.86	2.40	2.85	3.51	4.06

Add for Insurance		Canadian Postage Rates	
To $10 value	10¢	1st 2 lbs.	80¢
To $50 value	20¢	Each add'l lb.	30¢

DISTANCE FROM OKLAHOMA CITY

Local Zone	In Oklahoma City
Zones 1 & 2	not over 150 mi.
Zone 3	151 to 300 mi.
Zone 4	301 to 600 mi.
Zone 5	601 to 1000 mi.
Zone 6	1001 to 1400 mi.
Zone 7	1401 to 1800 mi.
Zone 8	Over 1800 mi.

MINIMUM BILLING

The minimum billing per order is $5.00. This applies to all orders except cash-with-order transactions.

SHIPPING INSTRUCTIONS

Unless specific instructions accompany the order, International will use its own judgement as to the best method to ship. If billing and shipping addresses differ this should be clearly noted on the order.

WARRANTY

CRYSTALS

1. Crystals will be within tolerance and are guaranteed only to work in the equipment or oscillator load specified.
2. All International Crystals are guaranteed against defective materials and workmanship for an unlimited time when used in the correct equipment or oscillator load.
3. All crystals should be checked immediately upon receipt. Any damage must be reported to International Crystal within 10 days of receipt of order. The crystals should then be returned for inspection and replacement. Credit will not be allowed after this 10-day period for crystals damaged in the mails.
4. Crystals are custom made to order and are not stock items. Units therefore may be returned only under the conditions specified in our return material policy.

"NOTICE"
PLEASE DO NOT RETURN GOODS WITHOUT
OUR SHIPPING INSTRUCTIONS.

EQUIPMENT

International Crystal Manufacturing Company warrants the parts and tubes in any International equipment to be free from defects in workmanship and material arising from normal usage. Its obligation under this warranty is limited to replacing any such parts or tubes of the receiver which, after regular installation and under normal usage and service, shall be returned within ninety (90) days from the date of original purchase of the unit to International and which shall be found to have been thus defective in accordance with the policies established by International Crystal Manufacturing Company.

The obligation of International Crystal Manufacturing Company is limited to making replacement parts available to the purchaser, and does not include either the making or the furnishing of any labor in connection with the installation of such replacement parts nor does it include responsibility for any transportation expense.

International Crystal Manufacturing Company assumes no liability and shall not be liable in any respect for failure to perform or delay in performing its obligations with respect to the above warranty if such failure or delay results, directly or indirectly, from any preference, priority or allocation order issued by the Government or because of any other act of the Government, or by war, conditions of war, inadequate transportation facilities, conditions of weather, act of God, strikes, lockouts, Governmental controls, or International's reasonable requirements for manufacturing purposes, or any cause beyond its control or occurring without its fault, whether the same kind or not.

CONDITIONS AND EXCLUSIONS

This warranty is expressly in lieu of all other agreements and warranties expressed or implied, and International Crystal does not authorize any person to assume for it the obligations contained in this warranty and neither assumes nor authorizes any representative or other person to assume for it any other liability in connection with such International units or parts or tubes thereof.

The warranty herein extends only to the original consumer purchaser and is not assignable or transferable and shall not apply to any unit or parts or tubes thereof which have been repaired or replaced by anyone else other than an authorized service contractor or distributor, or which have been subject to alteration, misuse, negligence or accident, or to the parts or tubes of any receiver which have had the serial number or name altered, defaced or removed.

CRYSTAL TOLERANCE

Calibration tolerance and temperature tolerance shall be as specified for the part type crystal ordered. Crystals will be calibrated within these tolerances working into the load or jig specified. Calibration and temperature tolerances are additive and therefore the exact crystal frequency will depend on the circuit adjustment in which the crystal is used.

DELIVERY

On small quantity orders, crystals will be shipped within one working day following entry of the order for processing. Low frequency and special crystals require ten to thirty days for processing. Insufficient information as to type and circuit will delay processing.

CONDITIONS OF SALES

Prices and design are subject to change without notice. We reserve the right to discontinue any item without notice and to change specifications at anytime without incurring any obligation to incorporate new designs in units or parts previously sold.

EXPORT ORDERS

Will be shipped FOB our factory in Oklahoma City, Oklahoma.

If previous credit has not been established, Irrevocable letter of credit or cash in U. S. Dollars, including a margin for postage should accompany the order.

In the event that a letter of credit will be used as a means of forwarding remittance, the letter must not expire for a period of six months after the placement of order.

The terms of the letter of credit should request air express shipment, with two copies of air express waybill and six (6) copies of our Commercial Invoice. We will be pleased to include a copy of an Insurance Certificate if required.

Please keep in mind that the Import License must be obtained by the customer, and all letter of credit charges will be reflected back to the customer.

If a United States Export License will be required, a fee of $15.00 will be charged, and must be considered in your remittance or irrevocable letter of credit.

Please note that all letters of credits submitted are subject to our approval in regard to terms, and expiration dates.

RETURN MATERIAL

A RETURN MATERIAL TAG should be obtained from International before returning any item.

International is engaged in the manufacture of custom crystals, processed to operate in a specified circuit and on a specified frequency for two-way communication. Orders in the FA type are processed to the frequency specified by the customer and they are usually intended for a specific application. Keeping the above in mind, it can be readily seen why crystals returned to International, for exchange, are of very little value, since the possibilities of another customer ordering the exact same crystal are many thousands to one. Crystals returned will be handled in two general categories. Those which are defective, and those units which the customer has ordered in error, and has returned for exchange of a new crystal.

DEFECTIVE CRYSTALS: All International Crystals are guaranteed against defective materials and workmanship for an unlimited

time when used in the correct equipment or oscillator load. These crystals are custom made to your order and are not stock items, therefore, the GUARANTEE APPLIES ONLY TO THE CRYSTAL IN THE FIELD. When it is necessary to request replacement crystals by phone, wire or letter, the crystals will be forwarded and billed, or shipped COD as the case may be.

If replacements are ordered, the defective crystal when returned will be tested and inspected for operation in the circuit for which they were originally processed, and if found to be defective because of defective material or poor workmanship, will be repaired or replaced on a no-charge basis and returned as spares. Physical damage to the crystal does not come under this warranty, and if the crystal has been found to be broken it cannot be repaired or replaced on a no-charge basis. It is very important that crystals be checked immediately upon receipt since credit will not be allowed for crystals damaged in the mail, unless they are reported within 10 days after receipt of the order. Crystals found defective because of operation in circuits producing excessive drive will be returned to the customer with no action taken.

CRYSTALS RETURNED BECAUSE OF CUSTOMER ERROR: When crystals are returned due to an error made on a customer's part in specifying the crystal's frequency, the crystal will fall in one of three groups.

1. Frequency change required is .01% or less.

Crystals in this group can normally be opened and the calibration plating adjusted to make the required frequency change. All aging and test cycles must be repeated. Cost per unit: 30% of catalog price.

2. Frequency change required is more than .01% but less than .1%.

Crystals in this group cannot be shifted with calibration plating and must be completely reprocessed. Plating must be stripped from the blanks and all processes must be repeated except lapping. A new cover and base are required. All aging and test cycles must be repeated. Cost per unit: 50% of catalog price.

3. Frequency change required is more than .1%.

Crystals in this group require a complete new unit including regrinding of the blank, new plating, new cover and base, calibration, and all aging and test cycles. Cost per unit: 80% of catalog price.

It should be explained that upon receipt of a returned crystal, the unit cannot be stocked for reasons stated above. It is therefore, necessary to dismantle the crystal unit and salvage such material possible. Normally, the crystal blank can be removed, and the crystal base salvaged. The remainder of the unit is of no value. The crystal blank must be returned to the plating department for cleaning and replating. It can therefore, be understood that actually more work is involved in salvaging the crystal unit, than is required for processing new material going through the line.

INTERNATIONAL CRYSTAL takes considerable effort to insure that the customer receives the correct crystal. However, in cases where insufficient information is not presented, it is not possible to determine any error the customer may have made in calculating his crystal frequency. This Company cannot be responsible in such cases.

INTERNATIONAL

technical data

The plated crystal consists of a quartz blank with electrodes plated directly on the blank. Silver and gold are the common metals used for the electrodes. Plating is done by one of three methods: evaporation under high vacuum; sputtering with low vacuum; or a system of furnace-firing silver or gold paints.

After plating, the blank is mounted on a base similar to that shown in figure 1. Spring loops on the ends of the mounting wires hold the blank, and also make electrical contact with the electrodes. Additional mechanical and electrical contact is made by placing a small amount of conductive, thermal-setting cement at the contact points. The blank mounted on its base is then calibrated to its final frequency, after which the can and base are soldered together. The entire unit is evacuated and either sealed off under vacuum or filled with dry air and then sealed off. The plated crystal has the advantage over the pressure mounted crystal of greater mechanical stability, permitting closer calibrating and temperature tolerances.

The plated crystal has the disadvantage of not being able to dissipate as much internal heat as the pressure mounted crystal, and will therefore not operate with as high-drive levels.

Room temperature stability in the order of a few cycles can be obtained from the plated crystal when operated properly. Over driving causes heating, instability, and may result in damage if excessive drive levels are used.

FUNDAMENTAL CRYSTAL CIRCUITS

The crystal oscillating in its fundamental mode should be used in circuits where the drive level is limited to 10 milliwatts below 10,000 kc and to five milliwatts between 10,000 kc and 15,000 kc. The modified Colpitts type of circuit is becoming widely used. This circuit in triode form is shown in figure 2.

The output of this circuit with a crystal of average activity, with various plate voltage, can be found in figures 3 and 4. The crystal drive is also indicated from these figures. The circuit in figure 2 is designed to offer a load capacitance of 32 mmf to the crystal.

The correct load capacitance of the oscillator is extremely important in operation of the crystal, if the frequency of oscillation is to be within tolerance for which the crystal was manufactured. Deviation from the specified load capacitance causes a shift in the frequency of the crystal. This shift becomes larger the higher the crystal frequency, and the greater the deviation.

The F-6 crystals, in the fundamental range can be furnished to operate into 32 mmf. The FA type in the fundamental range are furnished only for a 32 mmf load.

To reproduce 32 mmf precisely, lead lengths and position must be taken into account. In figure 2, capacitors C1, C2 and C3, together with tube and wiring capacitance determine the frequency.

Further information on oscillator design will be furnished upon request.

PLATED OVERTONE CRYSTALS

The use of overtone crystals is becoming common in high frequency communications. Crystals oscillating in this manner, actually generate energy on the overtone frequency, eliminating several multiplier stages required when the crystal is oscillating on its fundamental. In equipment design this eliminates many spurious responses.

FIGURE 1

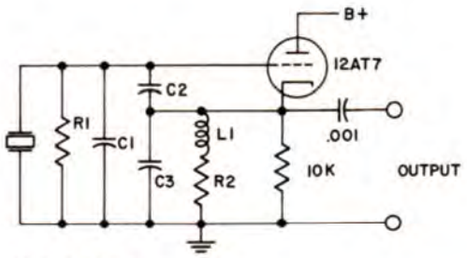

FIGURE 2

	3 MC to 16 MC	1 MC to 3 MC
R1	100 K	1 Meg.
R2	330 Ω	3.9 K
C1	22 mmf	22 mmf
C2	12 mmf	12 mmf
C3	75 mmf	75 mmf
L1	5 MH	7.5 MH

TABLE 2

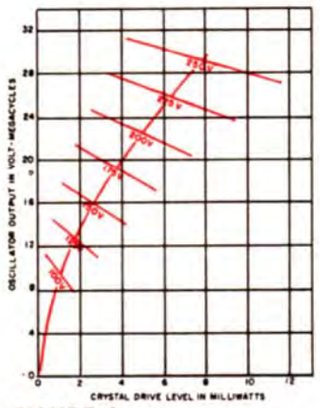

FIGURE 3

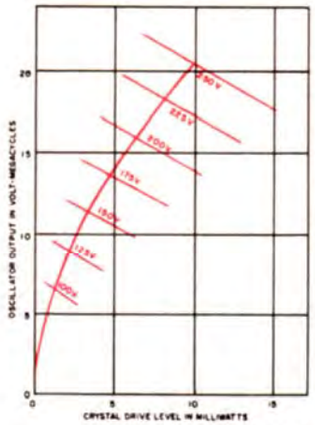

FIGURE 4

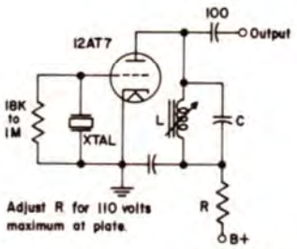

FIGURE 5

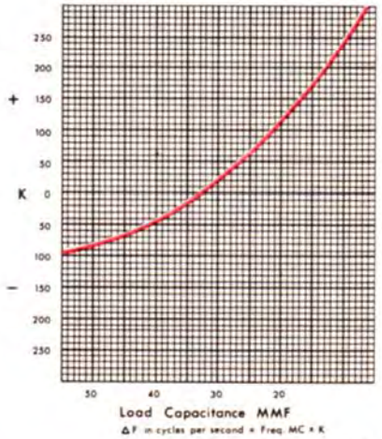

TABLE 1

Type	Load Capacitance or Oscillator	Calibrating Tolerance in Specified Load	Temp. Tolerance —30°C to +60°C
F-6 (fundamental)	Specified by customer (Use in commercial equipment)	±.0025%	±.003%
F-6 (overtone)	Specified by customer (Use in commercial equipment)	±.0025%	±.003%
FA (fundamental)	32 mmf (only)	±.01%	±.01%
FA (overtone)	Anti-resonate operation without additional load. (See circuit with crystal)	±.01%	±.01%

Tolerances listed apply only to AT cut type of crystal. In low frequency ranges, using other cuts, the tolerances will be plus or minus .02%.

TABLE 3

The plated crystal for overtone use is processed in the same manner as that for fundamental use, with the exception of blank finish. Normally, a finer finish is used, especially for the higher frequencies.

The crystal operated on one of its overtone modes oscillates in several layers, depending upon the mode. The frequency of oscillation is approximately the mode number times the blank frequency. Crystals calibrated for overtone operation are finished at the mode frequency, and the blank fundamental does not enter the calibration. For example, an 8,000 kc crystal when operated in an overtone oscillator, tuned to 24 mc, oscillates somewhat above 24,000 kc*. Since the overtone frequency is not an even multiple of the fundamental, in making an overtone crystal, the frequency of oscillation must be measured with the crystal oscillating on its overtone frequency. (*or about 24,010 kc).

OVERTONE CRYSTAL CIRCUITS

International overtone crystals are calibrated to operate at anti-resonance into an unloaded grid circuit. When oscillating at series resonance, the crystal frequency will be between 1 kc and 2 kc lower.

In the operation of overtone crystals, the energy returned to the crystal must be of overtone frequency. This requires that the overtone crystal oscillator always use a tuned circuit. The circuit shown in figure 5 is the simplest overtone circuit to construct. This circuit will operate up to 60 mc, using 3rd overtone crystals. Here again low-drive level is the important thing. The crystal should be used to generate a stable signal voltage and the power obtained in succeeding stages. Overtone crystals in the higher frequencies are only a few mils thick. Excessive drive will damage them. The circuit shown in figure 5 provides stable oscillation and reasonable output. Operation on the third mode produces better overall results, than using the higher modes. A maximum drive level of 2 milliwatts should be observed with overtone crystals. International plated overtone crystals have high activity, and are constructed especially for overtone use.

Over-driving the overtone crystal will cause unstable operation. Most problems encountered in the use of plated overtone crystals can be traced to excessive drive.

SELECTING THE PROPER CRYSTAL

Several facts should be considered other than frequency. The final oscillating frequency of the crystal is affected by the associated oscillator circuit through the reactive load and drive levels. For close tolerance operation and oven use, the ambient temperature also must be considered. Table 1 indicates the magnitude of change in the frequency of a given crystal when varying the load capacitance into which it is operating.

In the manufacture of crystals, certain limits must be adhered to when finishing the unit. Such limits are often held to better than .001% for commercial applications. Tolerances of this magnitude mean nothing unless the oscillator in which the crystal is to operate is an exact reproduction of the oscillator in which the crystal was calibrated. This same thing applies to wider tolerances. Persons doing work where closer tolerances are required (Broadcast, Commercial Two-Way, Civil Defense, CAP, etc.) should keep this in mind.

For overtone operation, crystal units especially processed for mode operation produced better results than fundamental types. Overtone crystals are calibrated on their overtone frequency and, therefore are accurate frequency control units. Overtone crystals are valuable for receiver-converter applications and are normally not used in transmitters, since only a small amount of power is available under stable operating conditions. Overtone crystals are calibrated either for series resonance or parallel resonance operation. **Temperature** — All crystals processed by International use "Zero Coefficient" cuts. Blank angles are held to closer tolerance in the F-6 units and, therefore, will change less over a given temperature range than the FA units. Tolerances are listed in table 3.

INTERNATIONAL

commercial crystals

custom made 70 KC to 137 MC

On this page we present our four most popular crystal mountings and the data for the crystals available in these mountings according to the various frequency ranges.

FREQUENCY RANGES AND MODES OF OPERATION

200-600 KC: Operates on fundamental edge shear oscillation. Load capacitance 32 mmf or as specified by customer.
If load is not known, specify cricuit or equipment in which crystal will be used.
600-20,000 KC: Operates on fundamental face shear oscillation. Load capacitance 32 mmf or as specified by customer.
10-60 MC: Operates on third mechanical overtone at anti-resonance. See recommended circuit on following page.
60-137 MC: Operates on fifth (or seventh) mechanical overtone at series-resonance. See recommended circuit on following page.

REMEMBER

Just any crystal and just any oscillator will not combine to produce designated spot frequencies!

DESCRIPTION AND DATA:

All of these crystals are of the plated, wire-mounted type. Low drift AT-cut blanks are used in these units above 600 kc, and low drift DT and CT-cut blanks are used in units below 600 kc; any crystal can be supplied for operation with or without an oven.

TEMPERATURE AND TOLERANCE

Supplied to meet equipment manufacturers specifications and may be as close as .001% without oven or .0005% with oven. Where no equipment is specified the following will apply:

AT — ±.005% from —55° to + 90° C.
±.003% from —30° to + 60° C.
DT-CT — ±.02% from —40° to + 70° C.

CALIBRATION TOLERANCE:
AT — .0025% of nominal at +30° C.
DT-CT — .01% of nominal at +30° C.

DRIVE LEVELS:
Maximum, AT — 10 milliwatts 600 kc to 999 kc
4 milliwatts 10,000 to 24,000 kc
2 milliwatts 25 mc to 137 mc
DT-CT — 2 milliwatts

CIRCUIT: As specified by customer. Crystals are available for all major two-way equipment and in most cases the necessary correlation data is on file. Where circuit is not specified, the crystal will be calibrated for operation into a load capacitance of 32 mmf. Typical circuits for the different frequency ranges are shown on the following page.
The F-6 series of crystal units is available to commercial or military specifications demanding tight frequency tolerance, long term stability and low frequency response.

ANY FREQUENCY (200 KC TO 137 MC) CAN BE SUPPLIED IN THE F-605, F-609, F-612 MOUNTINGS, FREQUENCIES 2,000 KC TO 137 MC F-700 AND FI-4 MOUNTINGS.

Consult our crystal sales engineers for special applications.

Fundamental KC	F-605, F-609, F-612 & F-700
200 - 499	$12.50*
500 - 849	22.50*
850 - 999	15.00*
1,000 - 1,499	9.80†
1,500 - 2,999	6.90†
3,000 - 10,999	4.90
11,000 - 19,999	6.90
20,000 - 22,000	10.00

Overtone MC	F-605, F-609, F-612 & F-700
10 - 60 (3rd)	$ 6.90
61 - 75 (5th)	10.50
76 - 110 (5th)	15.00
111 - 137 (7th)	15.00

*Available only on 10-30 days delivery basis at price shown.
†Crystals from 1,000 KC to 1,999 KC require 3-4 days for processing.

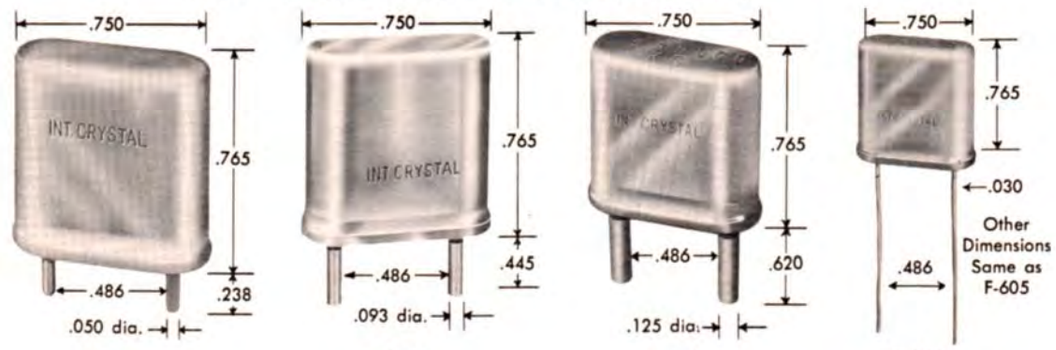

typical circuits and data

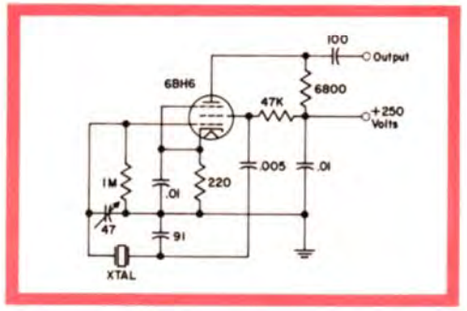

70 - 200 KC

This circuit includes a variable capacitor for precise adjustment of the crystal frequency. It offers a load capacitance of 32 mmf to the crystal. This circuit may be used for frequencies up to 10 mc.

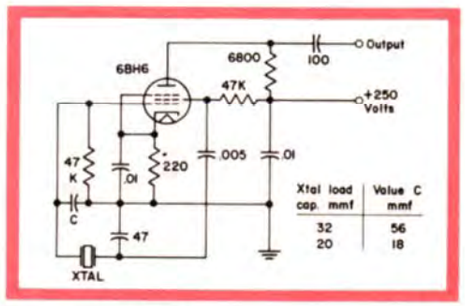

200 - 20,000 KC

Room temperature stability of a few cycles can be obtained with this circuit. Driving power will average about 5 milliwatts. By making capacitor C variable, exact frequency can be obtained.

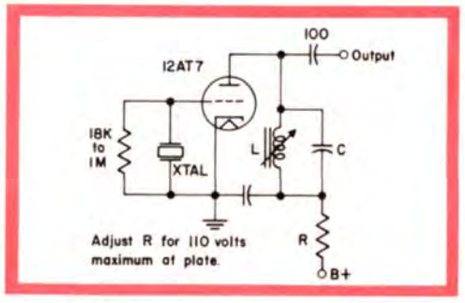

10 - 60 MC

Third mechanical overtone operation requires a tuned output circuit. This circuit is simple to construct and will operate up to 60 mc on third overtone crystals with reasonable output.

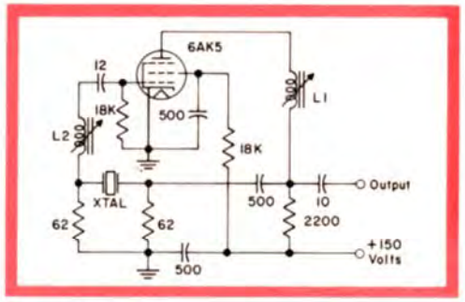

60 - 137 MC

Fifth or seventh mechanical overtone will be derived from this circuit. Drive level must be kept below 2 milliwatts.

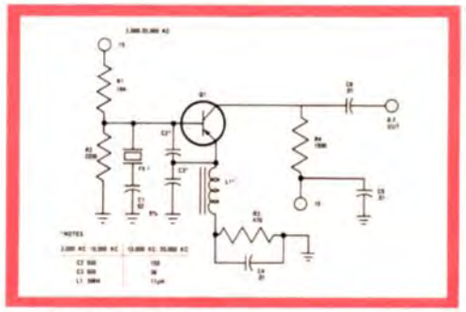

2,000 - 20,000 KC

This transistor circuit uses a fundamental crystal for frequencies 2,000 to 20,000 kc. Frequency variation ± .0005% max with 6 vdc to 15 vdc. See page 17.

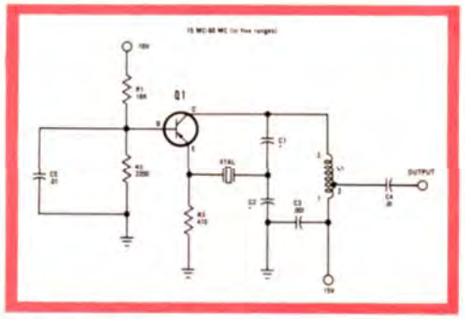

15 - 60 MC (in five ranges)

This circuit uses 3rd overtone series resonate crystal. Output better than 1.0 volts rms RF across 2200 ohms. See page 16.

specialized and miniature crystals

Crystals for use in military equipment can be supplied to meet specifications of MIL-C-3098C.

FM-1 AND FM-2 MINIATURES

These wire-mounted, plated crystals are identical except for the mountings — pin or pigtail. They are finding wide use in miniaturized components and are amazingly rugged and efficient for their size. Because of the extremely small crystal blank used, the frequency range and outputs are limited.

Frequency Range: 6,000 kc to 110 mc only. Temperature Tolerance: ±.005% from −55° to +90° C. Calibration Tolerance: .0025% of nominal at +30° C. Drive Level: 2 milliwatts. Mode of operation: 6,000 kc to 20,000 kc — Fundamental. 20 mc to 60 mc — Third mechanical overtone. 60 mc to 100 mc — Fifth mechanical overtone. 100 mc to 110 mc—Seventh mechanical overtone. Circuit: See page 12.

FM-1 and FM-2	(HC-18/U & HC-25/U)
Fundamental 6,000-19,999.99 kc	$ 6.90
Overtone (3rd) 20-59.99 mc	6.90
Overtone (5th) 60-110 mc	12.50

SPECIAL CRYSTALS	
Type FM-3 for GE TPL-receiver	$ 7.90
Type F-605 for GE TPL-transmitter	5.90

Crystals for Motorola types:

CO1	$5.80	CO6	Not available
CO2	7.50	CO7	$ 7.50
CO3	5.00		
CO4	5.00		
CO5	7.50		

F-13 This is a wire-mounted, plated crystal, used for maximum stability in low-frequency applications. Operates on the length-extension mode of oscillation.

Frequency Range: 70-200 kc. Temperature Tolerance: ±.015% −40° to +70° C. Calibration Tolerance: If circuit information is not supplied by the customer, calibration tolerance will be ± .01% or warranted to tune to zero frequency in a recommended circuit. (See page 12). Drive Level: Not to exceed .1 milliwatt. Note: F-13 crystals in the 70-99 kc frequency range are mounted in a can 2.5" high, .750" wide. All other frequencies . . . same size can as illustrated.

F-13	(HC-13/U)
70 - 99 kc	$22.50
100 - 200 kc	15.00

FI-4 This is a wire-mounted, plated crystal, hermetically sealed in a metal holder.

Frequency Range: 2,000 kc to 137 mc. Temperature Tolerance: ±.005% from −55° to +90° C. Calibration Tolerance: .0025% of nominal at +26° C. Drive Level: 2 milliwatts. Fundamental Mode: 2,000 kc to 20,000 kc. Third Overtone: 20 mc to 60 mc. Fifth Overtone: 60 mc to 100 mc. Seventh Overtone: 100 mc to 137 mc.

FUNDAMENTAL KC	**FI-4
2,000 - 2,999	$ 6.90
3,000 - 10,999	4.90
11,000 - 19,999	6.90
20,000 - 22,000	10.00

OVERTONE MC	**FI-4
10 - 60 (3rd)	$ 6.90
61 - 75 (5th)	10.50
76 - 110 (5th)	15.00
111 - 137 (7th)	15.00

****Pins spaced so that either 1 or 2 FI-4 Crystals will fit a 9 pin socket.**

F-16 This is a wire mounted plated crystal enclosed in a metal shield similar to octal base tube type 6SK7, etc.

Other Data: Dependent on frequency range, and the same as data given under frequency ranges on page 11 for our F-605, 609, 612, and 700 holders. Standard Octal Base (Crystal Connections pins 3 and 7).

F-16	(OCTAL TUBE TYPE)
70 - 200 kc	$25.00
201 - 999 kc	15.00
1,000 - 1,999 kc	12.50
2,000 - 20,000 kc	10.00
10 - 100 mc (Overtone)	17.50

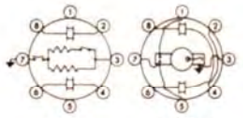

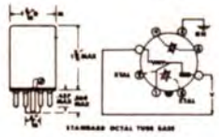

*For use on 6 or 12 volts, 85° C. Houses 2 HC-6/U crystals.

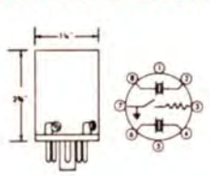

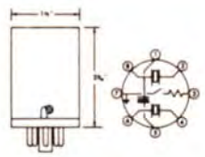

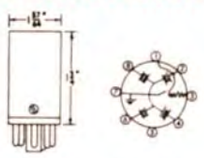

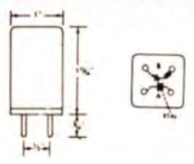

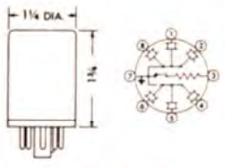

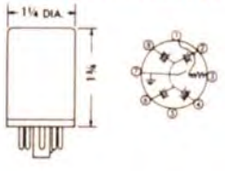

crystal ovens

HO-9

Houses 1 or 2 HC-6/U crystals units (F-605). For use in equipment requiring a high stability over a wide ambient temperature range. Ambient temperature range minus 55° C to operating temperature less 5°. Operating temperature 85° C. Rapid warmup. Temperature cycling after warmup less than plus or minus 1° C. Octal tube base. (9 volt)

Cat. No. 150-111 ..... $ 6.75
Replacement RCA oven
Cat. No. 150-112 ..... 11.00
Replacement GE oven
Cat. No. 150-113 ..... 10.75

HO-9T

Houses 1 or 2 HC-13/U (F-13) crystal units. Ambient temperature range minus 55° C to within 5° C of operating temperature. Operating temperature 60° C. Warmup less than 10 minutes from minus 35° C. Temperature cycling after warmup plus or minus 1° C maximum to plus or minus 0.5° C nominal. Thermostat, "Stevens Snap Action". (9 volt)

Cat. No. 150-181 ..... $11.75

HO-93

Houses three HC-6/U (F-605) crystal units. Ambient temperature range minus 35° C within 5° C of operating temperature. Operating temperature 85° C. Warmup less than 20 minutes from minus 35° C. Temperature cycling plus or minus 1° C to plus or minus 0.5° C. Thermostat, "Stevens Snap Action". (9 volt)

Cat. No. 150-183 ..... $13.35

HO-94

Houses four HC-6/U (F-605) crystal units. Ambient temperature range minus 35° C to within 5° C of operating temperature. Operating temperature 75° C. Temperature cycling plus or minus 1° C maximum to plus or minus 5° C nominal. Warmup less than 15 minutes from minus 35° C. Thermostat, "Stevens Snap Action". (9 volt)

Cat. No. 150-182 ..... $14.55

HO-M6 AND HO-M12

Replacement ovens for use in Motorola two-way communication equipment. Houses 1 HC-6/U crystal unit. Operating temperature 85° C.

HO-M6 (6 volt) Cat. No. 150-114 ..... $ 6.75
HO-M12 (12 volt) Cat. No. 150-116 ..... 6.75

HO-9M6

Houses six HC-25/U (FM-2) crystal units. Ambient temperature range minus 55° C to within 15° C of operating temperature. Operating temperature 75° C. Warmup less than 15 minutes from minus 55° C. Thermostat, "Stevens Snap Action". (9 volt)

Cat. No. 150-205 ..... $18.00

HO-914

Accommodates four HC-12/U (FI-4) crystal units. Warmup time approximately 15 minutes. Temperature cycling plus or minus 1° C maximum. (9 volts)

Cat. No. 150-244 ..... $18.00

(Shipping weight: each crystal oven, 1 lb.)

amateur crystals

1000 KC TO 137 MC — .01% TOLERANCE

These are wire mounted, plated crystals for use by amateurs and experimenters where tolerance of .01% is permissible and wide-range temperatures are not encountered.

Just any crystal in any oscillator will NOT combine to produce spot frequencies. These crystals are designed to operate into a 32 mmf load on their fundamental between 1,000 kc and 15,000 kc. Overtone crystals operate at anti-resonance on 3rd mode and series resonance on 5th and 7th mode crystals. (See recommended circuits on page 12.)

- **HOLDERS:** Metal, hermetically sealed. The FA-4 is a HC-12/U pin type, the FA-5 and FA-9 are HC/6U pin type, while the FM-9 is an HC/25U.
- **FREQUENCIES:** (Specify crystal type and frequency when ordering.)

Overtone crystals are calibrated on their overtone frequency. They are valuable for receiver-converter applications and are NORMALLY NOT UTILIZED IN TRANSMITTERS, since only a small amount of power is available under stable operating conditions.

- **CALIBRATION TOLERANCE:** ± .01% of nominal at 30° C.
- **TEMPERATURE RANGE:** —40° to + 70° C. ± .01% of frequency at 30° C.
- **DRIVE LEVEL:** Recommended, maximum 3 milliwatts for overtones: up to 80 milliwatts for fundamentals, depending frequency. See chart.

ONE DAY PROCESSING

Orders for less than five crystals will be processed and shipped in one day. Orders received on Monday through Thursday will be shipped on the day following. Orders received on Friday will be shipped the following Monday.

FA-5

FA-9

FM-9

FA-4

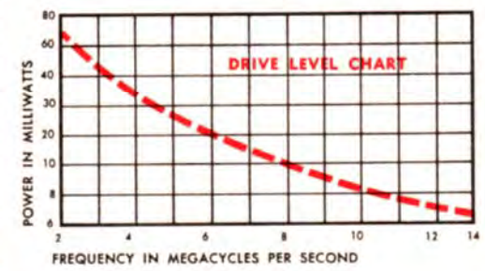

	FA-5 and FA-9	PRICES	FM-9	PRICES	FA-4	PRICES
Fundamental	* 1,000- 1,499 kc	$5.75	Not Available		Not available	
	* 1,500- 1,799 kc	4.95	Not Available		Not available	
	* 1,800- 1,999 kc	4.40	Not Available		Not available	
	2,000- 9,999 kc	3.30	8,000- 9,999 kc	$5.90	2,000- 9,999 kc	$3.30
	10,000-14,999 kc	4.40	10,000-14,999 kc	5.90	10,000-14,999 kc	4.40
	15,000-20,000 kc	5.50	15,000-20,000 kc	5.90	15,000-20,000 kc	5.50
Overtone (3rd)	10- 14.99 mc	4.40	Not Available		10- 14.99 mc	4.40
	15- 29.99 mc	3.30	20- 39.99 mc	5.90	15- 29.99 mc	3.30
	30- 59.99 mc	4.40	40- 59.99 mc	5.90	30- 59.99 mc	4.40
Overtone (5th)	60- 75.99 mc	4.95	60- 89.99 mc	9.50	60- 75.99 mc	4.95
	76- 99.99 mc	7.15	90-100 mc	9.50	76- 99.99 mc	7.15
Overtone (7th)	100- 137 mc	9.35	101-109.99 mc	9.50	100-137 mc	9.35

*Allow three to four days for processing.

INTERNATIONAL

plug-in transistor oscillators.....direct crystal control to 160 mc

- Signal Generators For Receiver Alignment
- Quick-Change Plug-In Oscillators

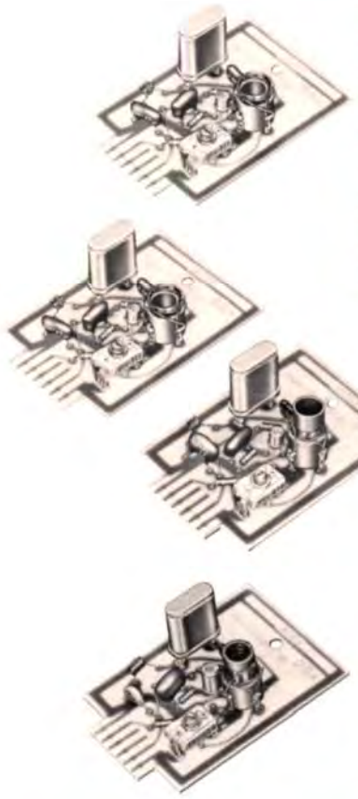

HIGH FREQUENCY (20 mc — 160 mc)

Five transistor oscillators covering 20 mc - 160 mc. Standard 77°F calibration tolerance ± .0025%. The frequency tolerance is ± .0035%. Oscillator output is .2 volts (min) across 51 ohms. Power requirement: 9 vdc @ 10 ma. max.

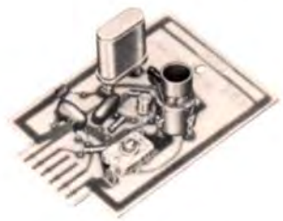

Crystal Frequency	Crystal Price
20-60 mc	$ 6.90
60-100 mc	12.00
101-140 mc	15.00
141-160 mc	18.00

Oscillator Type	Oscillator Range	Crystal Type	Temperature Tol. —40°F to 150°F	Oscillator (Less Crystal) Price
OT-24	20-40 mc	CY-7T	± .0035%	$9.00
OT-46	40-60 mc	CY-7T	± .0035%	9.00
OT-61	60-100 mc	CY-7T	± .0035%	9.00
OT-140	100-140 mc	CY-7T	± .0035%	9.00
OT-160	110-160 mc	CY-7T	± .0035%	9.00

- Band Edge Markers • Frequency Markers For Oscilloscopes
- Portable Signal Standards • Accessory Cases

LOW FREQENCY (70 kc — 20,000 kc)

Four transistor oscillators covering 70 kc - 20,000 kc. Trimmer capacitor for zeroing crystal. When oscillator is ordered with crystal the standard will be ± .0025%. Oscillator output is 1 volt (min) across 470 ohms. Power requirement: 9 vdc @ 10 ma. max.

Oscillator Type	Oscillator Range	Crystal Type	Temperature Tol. —40°F to + 150°F	Oscillator (Less Crystal) Price
OT-1	70-200 kc	CY-13T	± .015%	$6.00
OT-2	200-5,000 kc	CY-6T	200-600kc ± .01% 600-5,000kc ± .0035%	6.00 6.00
OT-3	2,000-12,000 kc	CY-6T	± .0035%	6.00
OT-4	10,000-20,000 kc	CY-6T	± .0035%	6.00

CRYSTAL FREQUENCY	CRYSTAL PRICE
70-99 kc	$22.50
100-200 kc	15.00
200-499 kc	12.50
500-849 kc	22.50
850-999 kc	15.00
1,000-1,499 kc	9.80
1,500-2,999 kc	6.90
3,000-10,999 kc	4.90
11,000-20,000 kc	6.90

OSCILLATOR CASES

Small portable cases for use with the OT series of plug-in oscillators. Prices do not include oscillators.

(When oscillator and crystal are ordered with FOT-10 case a 77° F tolerance of ± .001% may be obtained at $2.00 extra per oscillator/crystal unit. When oscillator/crystal units are ordered with FOT-20 case, a single unit can be supplied with temperature calibration over a range of 40° F to 120° F. Correction to ± .0005%. Add $25.00 to the price of FOT-20 and oscillator/crystal unit.)

Oscillators — shipping weight: 1 lb. each
Cases — shipping weight: 3 lbs. each

FOT-20

FOT-10

FOT-20
For high accuracy calibration requirements. Includes battery and output jack, output meter circuit and battery check, as well as thermistor temperature measuring circuit. **$87.50**

FOT-10
Basic case with battery and output jack for general wider tolerance applications. **$14.50**

MT-1
Oscillator board mounting kit. Provides mounting for International plug-in transistor oscillators. Six contact "T" series mounting with shield. **$4.95**

MT-2
Six contact socket and plate for oscillator case. **$1.95**

INTERNATIONAL

citizens band crystals

The type T, type R, and type RE crystals are wire mounted, plated crystals manufactured by International for the Executive series Citizens Band transceivers. The metal holders are hermetically sealed and guaranteed by International for the life of the equipment and will be replaced free of charge if defective due to workmanship. Available from your authorized International dealer.

Transmitting: TYPE T, Models 100, 50, 35, 10
Receiving: TYPE R, Models 100, 50, 35
TYPE RE, for earlier model Executives

Transmitting and Receiving Crystals.....each **$4.75**

Crystals for International's KB-1 and Executive model Citizens band transceivers are stock items and orders can normally be processed within one day. When ordering use correct stock numbers. Citizens band crystals for equipment by manufacturers other than International are custom made. Specify load capacitance of circuit or forward a sample set of crystals. When ordering Citizens band crystals for other make units, specify "FCB type crystals," make of equipment, whether for TRANSMIT or RECEIVE, and channel.

Type RE

Type R

Type T

CITIZENS BAND CRYSTALS (For KB-1 and Executive units)

Ch. 1, Transmit	900-101	$ 4.75	Ch. 1, Receive	900-179	$ 4.75
Ch. 2, Transmit	900-102	4.75	Ch. 2, Receive	900-180	4.75
Ch. 3, Transmit	900-103	4.75	Ch. 3, Receive	900-181	4.75
Ch. 4, Transmit	900-104	4.75	Ch. 4, Receive	900-182	4.75
Ch. 5, Transmit	900-105	4.75	Ch. 5, Receive	900-183	4.75
Ch. 6, Transmit	900-106	4.75	Ch. 6, Receive	900-184	4.75
Ch. 7, Transmit	900-107	4.75	Ch. 7, Receive	900-185	4.75
Ch. 8, Transmit	900-108	4.75	Ch. 8, Receive	900-186	4.75
Ch. 9, Transmit	900-109	4.75	Ch. 9, Receive	900-187	4.75
Ch. 10, Transmit	900-110	4.75	Ch. 10, Receive	900-188	4.75
Ch. 11, Transmit	900-111	4.75	Ch. 11, Receive	900-189	4.75
Ch. 12, Transmit	900-112	4.75	Ch. 12, Receive	900-190	4.75
Ch. 13, Transmit	900-113	4.75	Ch. 13, Receive	900-191	4.75
Ch. 14, Transmit	900-114	4.75	Ch. 14, Receive	900-192	4.75
Ch. 15, Transmit	900-115	4.75	Ch. 15, Receive	900-193	4.75
Ch. 16, Transmit	900-116	4.75	Ch. 16, Receive	900-194	4.75
Ch. 17, Transmit	900-117	4.75	Ch. 17, Receive	900-195	4.75
Ch. 18, Transmit	900-118	4.75	Ch. 18, Receive	900-196	4.75
Ch. 19, Transmit	900-119	4.75	Ch. 19, Receive	900-197	4.75
Ch. 20, Transmit	900-120	4.75	Ch. 20, Receive	900-198	4.75
Ch. 21, Transmit	900-121	4.75	Ch. 21, Receive	900-199	4.75
Ch. 22, Transmit	900-122	4.75	Ch. 22, Receive	900-200	4.75
Ch. 23, Transmit	900-123	4.75	Ch. 23, Receive	900-201	4.75

INTERNATIONAL

accessories

AC-95 ADAPTER WITH HOLD DOWN BRACKET
Similar to AC-95 Adapter. Includes metal hold down bracket for replacement of Motorola SFMT-2 Holder.
Cat. No. 150-117.....$ .65

AC-95 ADAPTER
Will adapt F-609 or FA-9 crystal to fit standard 5 prong tube socket.
Cat. No. 150-108.....$ .30

AC-9 CRYSTAL SOCKET
Phenolic to fit F-609 or FA-9.
Cat. No. 150-110.....$ .15

AC-5 CRYSTAL SOCKET
Ceramic to fit F-605 or FA-5.
Cat. No. 150-109.....$ .15
(Quantity price on request)

S-121 TRIPLE SOCKET CRYSTAL SWITCH
Holds three AC-5 crystal sockets; single pole, three position switch. Ideal for transceiver design. Completely wired.
Cat. No. 150-126.....$ 2.75

AC-44 CRYSTAL SWITCH ASSEMBLY
Single pole, 24 position switch and sockets. Permits instant selection of any one of 24 different crystals. Completely wired. Shipping weight: 2 lbs.
Cat. No. 150-131.....$12.95

LABORATORY COAX SWITCH
International patented high attenuation coax switch. Two input coax connectors, one output. For convenience in switching antennas or coax connections between equipment. Single pole double throw. Standing wave ratio less than 1.2 to 1. Open circuit attentuation 80 db or better. 50-70 ohms nominal impedance. DC to 250 mc. Size 7"W x 4"H x 1½"D. Heavy duty type. Rubber feet prevents marring equipment or desk surface. Shipping weight: 2 lbs.
Cat. No. 100-111.....$19.50

AC-20 MULTIPLE CRYSTAL SOCKET
Will accommodate 20 type F-605 or FA-5 crystals. Consists of 20 AC-5 sockets and mounting plate. Shipping weight: 2 lbs.
Cat. No. 150-103.....$ 3.95

12 POSITION CRYSTAL SWITCH
Convert Executive units with three transmit positions to allow operation in any of 12 channels. Each of the 12 crystal sockets is numbered to assure positive placement of crystals. Factory wired. Complete with 12 position dial plate in Executive brown with gold numerals. Installation instructions. Shipping weight: 2 lbs.
Cat. No. 150-163.....$ 7.50

THREE POSITION COAX SWITCH
Compact switch for switching to three different antennas. Size 3¼"W x 2¼"H x 1½"D. Rubber feet. Can be installed atop receiver or on desk for convenience in selecting proper antenna. Requires PL-259 connectors on cables. Shipping weight: 2 lbs.
Cat. No. 100-112.....$ 7.50

PK (PICK OFF) BOXES
Handy accessories for the International C-12B Frequency Meter. Feeds attenuated RF signals under test to C-12B mixer to produce beat note for meter reading.

PK-1 for testing CB transmitters with maximum power output of 1 watt. Box and dummy load. Shipping weight: 2 lbs.
Cat. No. 150-122.....$15.00

PK-5 for testing CB transmitters with maximum input of 5 watts. Box and dummy load. Shipping weight: 2 lbs.
Cat. No. 150-123.....$15.00

PK-S calibrated for specific power inputs between 1 watt and 250 watts (specify when ordering). Box only (less dummy load). Shipping weight: 2 lbs.
Cat. No. 150-124.....$15.00

INTERNATIONAL

FM-5000

frequency meter

SPECIFICATIONS

- **Crystal Oscillator Unit**
  Stability: +85° to +95°F ± .00025%
  +50° to +100°F ± .0005%
  +32° to +120°F ± .001%
  Range: FO-50 100 kc to 500 kc
  FO-51 1,000 kc to 2,000 kc
  FO-52 2,000 kc to 6,000 kc
  FO-53 6,000 kc to 9,000 kc
  FO-54 9,000 kc to 13,000 kc
  FO-55 13,000 kc to 20,000 kc
  FO-56 20 mc to 60 mc
- **Transmitter Pickup**
  Range: 25 mc to 470 mc Standard
  2 mc to 25 mc Special
  Sensitivity: 50,000 microvolts at 25 mc to 300,000 microvolts at 470 mc across 50 ohms.
- **Counter Circuit**
  Frequency Range: 0 to 5 kc or 0 to 15 kc
  Residual Error: 100 cps at zero beat
- **Audio Oscillator**
  Frequency: 2,080 cps
  Output: 0 to 1.5 volts rms. across 50 ohms
- **RF Signal Generator**
  Frequency Range: 25 to 470 mc
  Low Output: .5 to 2 microvolts across 50 ohms (uncalibrated)
  High Output: Approximately 200 microvolts open circuit
- **IF Signal Generator**
  Frequency Range: 100 kc to 60 mc
  Output: 10,000 microvolts minimum
- **Battery Power Required**
  1½ volts dc at 60 ma ("A" Battery)
  135 volts dc at 7 ma ("B" Battery)
  18 volts dc at 5 ma
  6 volts dc at 250 ma
- **Panel Controls**
  Function Selector 7 positions
  Battery Test "A"
  Battery Test "B"
  Calibration
  RF
  Deviation X1
  Deviation X3
  Modulation Set
  Harmonic Adjust
  RF Attenuator
  Modulation Set
  Counter Calibration
  Oscillator B+ Set
  Power Off-On
  Transmitter/Audio Oscillator Key
- **Oscillator Heating**
  Thermostat adjust for 92°F final oscillator temperature
  Plug and cords provided for 115 vac or 6/12 vdc source
  Heating Time: Approximately 15 minutes to 85°F from 32°F
- **Dimensions:** 10" x 8" x 7½"

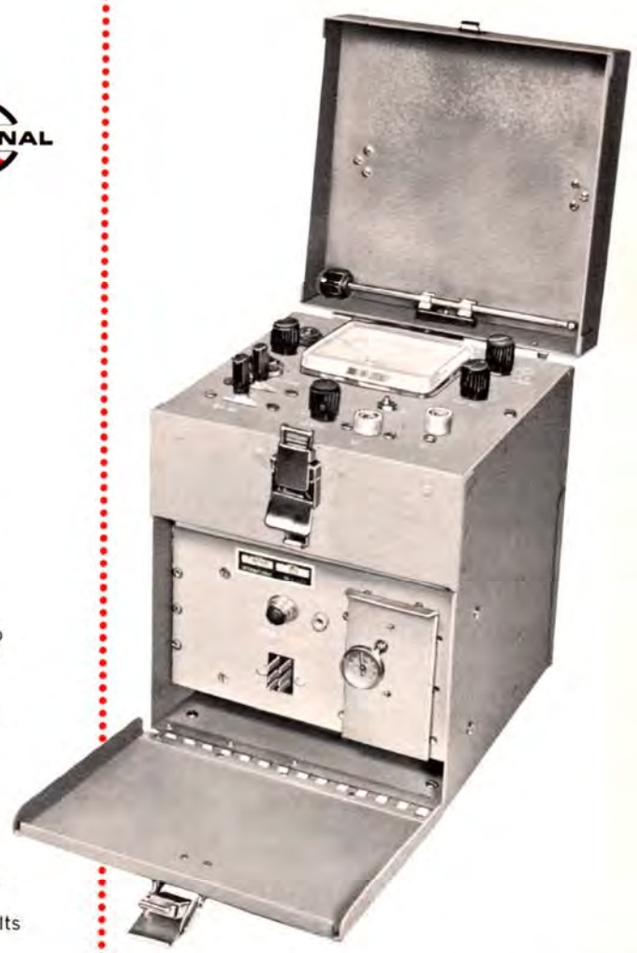

INTERNATIONAL'S Frequency Meter, Model FM-5000, is a beat frequency type measuring device. The FM-5000 incorporates a transistor counter circuit, self contained batteries, low RF output for receiver checking, audio oscillator, transmitter keying circuit, and plug-in oscillators, including heating circuits.

FM-5000 Frequency Meter, including batteries, accessories and complete instruction manual, less oscillators and crystals. Shipping weight: 18 lbs.

Cat. No. 620-103 ..... **$375.00**

PLUG-IN OSCILLATORS*

1 to 4 ..... **$25.00 ea.**
5 to 24 ..... **15.00 ea.**
25 to 99 ..... **9.00 ea.**
100 or more ..... **8.25 ea.**

*Oscillator prices are less crystal.
Shipping weight: 2 lbs.

CRYSTALS FOR OSCILLATORS

100 kc - 1,999 kc ..... **$8.75 ea.**
2,000 kc - 60 mc ..... **6.25 ea.**

Crystal prices include calibration in the oscillator units for which they are furnished.

INTERNATIONAL

FO-2410

24 CRYSTAL

oscillator unit

The 24-crystal oscillator unit is designed for use with International's FM-5000 frequency meter. This oscillator houses 24 crystals and a heater circuit. Cable and adapter supplied with the FO-2410 plug into the oscillator well of the FM-5000. Crystal range is 9,000 kc to 13,000 kc and the stability remains the same as specified for the single crystal units. Uses battery power from FM-5000. FO-2410 complete with cable and adapter, less crystals.

Shipping weight: 15 lbs.

Cat. No. 200-159 ..... **$195.00**

Crystals for FO-2410
(9 mc to 13 mc) ..... **$6.75 ea.**

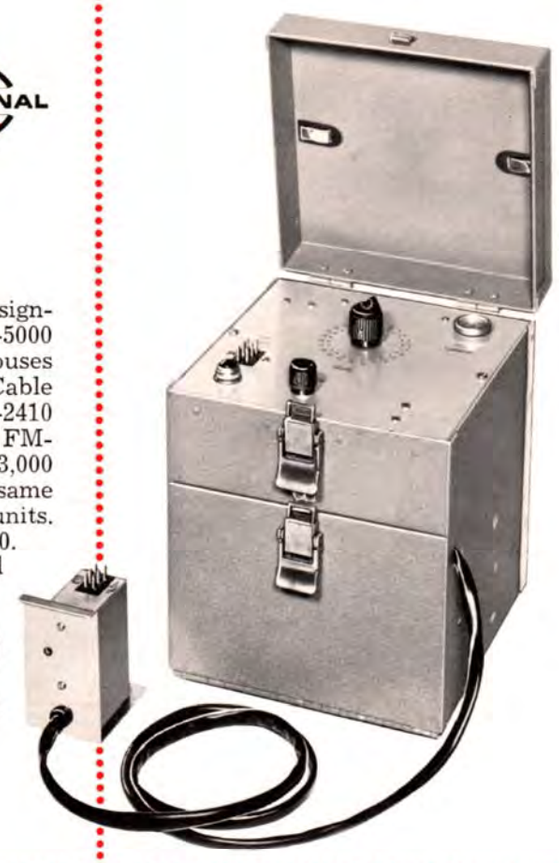

MODEL C-12

CRYSTAL CONTROLLED

alignment oscillator

For generating standard signals in alignment of IF and RF circuits, 200 kc to 60 mc. Makes 12 most used frequencies instantly available through 12 crystal positions accommodating F605 crystals 200 kc to 15,000 kc. Special oscillators are available for use at higher frequencies to 60 mc. Maximum output .6 volt. Case with carrying handle and 115 vac 60 cycle power supply included. Less crystals. Shipping weight: 9 lbs.

Cat. No. 620-100 ..... **$69.50**

INTERNATIONAL

frequency alignment equipment

SPECIFICATIONS — C-12B

- **Frequency Measurement**
  Frequency range — 26.965 mc to 27.255 mc
  Frequency stability — ± .0025% 32°F to 125°F; ± .0015% 50°F to 100°F
- **Power Measurement** — 0 to 5 watts, accuracy ± ¼ watt
- **Counter Circuit**
  Frequency range — 0 to 3 kc
  Residual error — 100 CPS @ zero beat
- **AM Modulation Measurement**
  Range — 0 to 100%
  Accuracy — 3% @ 400 CPS @ 80% modulation
- **Signal Generator**
  Frequency range — 26.965 mc to 27.255 mc
  Low output — 1 microvolt through special pick-off box furnished with meter
  High output — 100 microvolts through output jack
- **Battery Power Required**
  1½ vdc @ 60 ma
  67½ vdc @ 5 ma
  9 vdc
- **Panel Controls**
  Channel selector, 24 positions
  "Hi-Lo" frequency adjust
  RF level control
  Modulation set
  Power
  Meter calibration adjust
  Function selector, 7 positions
  Modulation
  RF
  Deviation
  Calibration
  Battery Test "A"
  Battery Test "B"
  Battery Test "C"

C-12B
frequency meter
FOR CITIZENS BAND SERVICING

The International C-12B portable secondary frequency standard is a self-contained unit designed for use in servicing radio transmitters and receivers used in the 27 mc Citizens Band range. The meter is capable of holding 24 crystals and comes with 23 crystals installed. The 23 crystals cover channels 1 through 23 (26.965 mc to 27.255 mc). The frequency accuracy of the C-12B is ± .0025% 32°F —125°F; ± .0015% 50°F to 100°F. Additional built-in features are the transistorized frequency counter circuit, the AM percentage modulation checker and power output meter. The PK (pick-off) box, dummy load and connecting cable supplied make it an ideal and simple instrument to use. Shipping weight: 9 lbs.

Complete with crystals and batteries.
Cat. No. 620-101 ..... **$300.00**

C-12M
frequency meter
FOR MARINE BAND SERVICING

The International C-12M portable secondary standard is a self contained unit designed for servicing radio transmitters and receivers used in the 2 mc to 15 mc range. The meter has sockets for 24 crystals. The frequency accuracy IF ± .0025% 32°F to 125°F, ± .0015% 50°F to 100°F. The C-12M has a built-in transistorized frequency counter circuit, AM percentage modulation checker and modulated carrier and relative percentage field strength. The unit is supplied with PK (pick-off) box, and connecting cable.

C-12M Frequency Meter, complete with batteries, less crystals. Shipping weight: 9 lbs.
Cat. No. 620-104 ..... **$235.00**
Crystals (specify frequency) ..... **$5.00 ea.**

SPECIFICATIONS — C-12M

- **Frequency Measurement**
  Frequency range: 2 mc to 15 mc. Frequency stability: ± .0025% 32°F to 125°F; ± .0015% 50°F to 100°F.
- **Counter Circuit**
  Frequency range: 0 to 1 kc and 0 to 500 cps. Residual error of one scale division.
- **AM Modulation Measurement**
  Range: 0 to 100%. Accuracy: 3% @ 400 cps @ 80% modulation.
- **RF Signal Generator**
  Frequency range: 2 mc to 15 mc (modulated approximately 1000 cps).
- **Battery Power Required**
  1½ vdc @ 60 ma. 67½ vdc @ 5 ma. 9 vdc (two).
- **Panel Controls**
  Channel selector, 24 positions. "Hi-Lo" frequency adjust. RF level control. Modulation check. Meter calibration adjust. Function selector, 7 positions: Modulation and modulated RF, RF, Deviation 1 kc full scale (x2), Deviation 500 cps full scale (x1), Calibration, Battery Test "A", Battery Test "B".

INTERNATIONAL

MODEL 7212
frequency meter

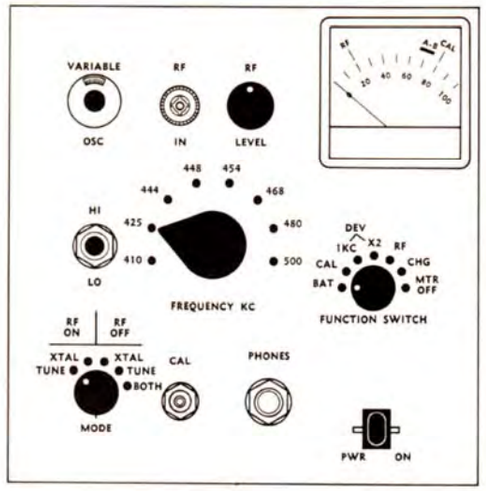

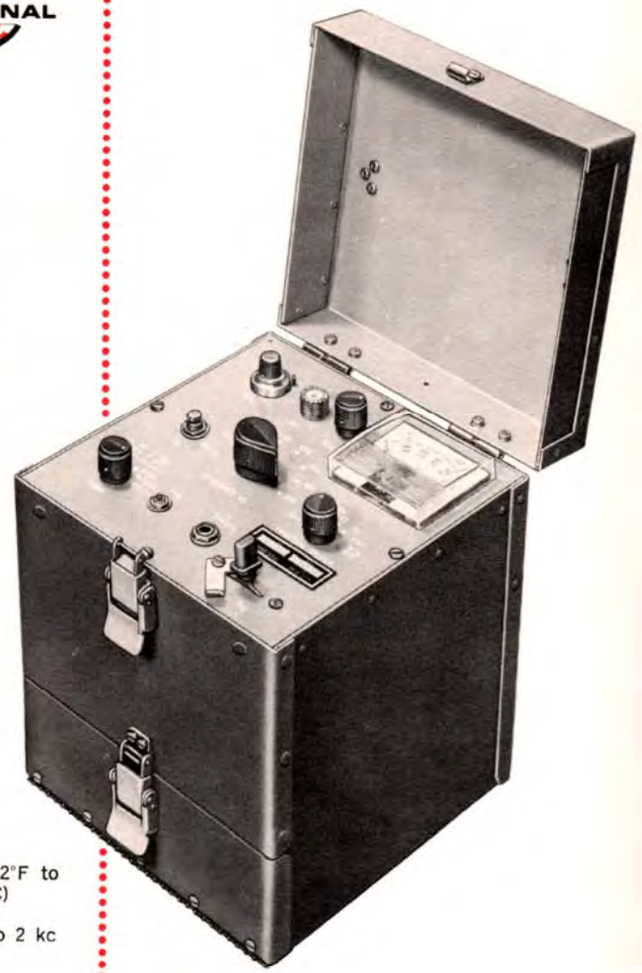

SPECIFICATIONS

1. Frequency Measurement
   Frequency range: 400 kc to 500 kc
   Frequency stability: ± .01% from 32°F to 104°F (0°C to 40°C)
2. Counter Circuit
   Frequency range: 0 to 1 kc and 0 to 2 kc
   Residual error of one scale division
3. RF Signal Generator
   Frequency range 400 kc to 500 kc
4. Battery Power Required
   9.6 vdc
5. Panel Controls
   Frequency kc 8 positions
   RF level control
   Variable osc. control
   Meter calibration adjust
   PWR on-off lever switch
   Mode switch 5 positions
   RF on-xtal or tune
   RF off-xtal, tune or both
   Function switch 7 positions
   Bat test
   Meter calibration
   Deviation
   1 kc or x2
   RF
   CHG
   Meter off

The International Model 7212 portable secondary frequency standard is a self-contained unit designed for use in servicing radio transmitters and receivers used in the 400 kc to 500 kc range. The frequency accuracy is ± .01% from 32°F to 104°F (0°C to 40°C). The meter is capable of holding eight crystals. Features include the transistorized frequency oscillator and built-in battery charger. Shipping weight: 18 lbs.

Cat. No. 620-105 ..... **$575.00**

INTERNATIONAL

MODEL 1110
SECONDARY
frequency standard

The Model 1110 is an economy portable secondary standard for field or bench use. The unit contains a rechargeable battery eliminating battery expense over the life of the cell. A one (1) mc crystal provides long term stability of plus or minus 10 cycles over range 40° F to 100° F. Short term stability of better than 1 part in 10^7 can be obtained. Zero adjustment for the oscillator is reached through the front panel. All transistor circuits provide outputs at 1 mc, 100 kc and 10 kc. A switch selects the desired frequency. Level of the signal can be set by the GAIN control. More than 8 hours operation is available on one charge. The Model 1110 may be left on charge at all times when not in use.

Shipping weight: 12 lbs.

Cat. No. 620-106 ..... **$125.00**

TMR SERIES

transistor multivibrators

- **100 kc to 1 kc**
- **100 cycles to 1 cycle**
- **Individual multivibrators contain isolation amplifiers.**
- **Excellent stability over wide temperature range.**

Each TMR multivibrator board contains its own isolation amplifier, frequency, and balance controls. Silicon transistors provide excellent stability over a wide temperature range. Separate outputs on each board are provided for drive and pick-off circuits. The units may be mounted as shown on a standard AOC case or built into other equipment. The "T" series of AOC units mount in a Cinch type 250 or Amphenol 143 six contact connector. AOC mounting kit MT-1 or mounting plates MT-2 may be used and provide all the necessary hardware. Input voltage required 9 vdc at 3 ma (approx) for each unit.

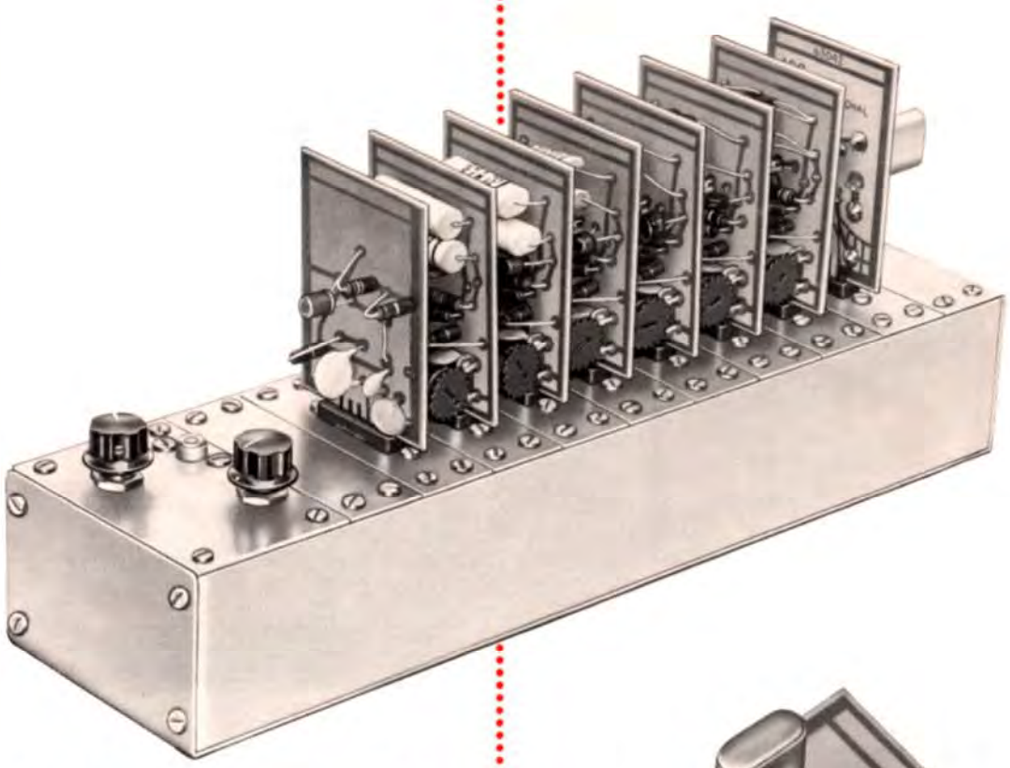

Cat. No. TMR — 100 kc	**$ 9.95**
Cat. No. TMR — 10 kc	**9.95**
Cat. No. TMR — 1 kc	**9.95**
Cat. No. TMR — 100 cy	**14.95**
Cat. No. TMR — 10 cy	**14.95**
Cat. No. TMR — 1 cy	**16.95**

Shipping weight: Multivibrators, 1 lb. each

For specifications on
Type OT oscillators
see pages 16-17

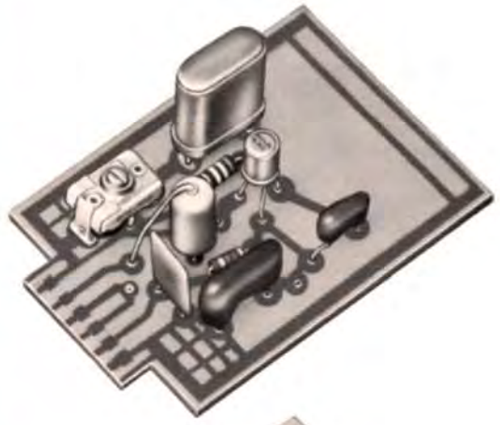

INTERNATIONAL

AOC

multivibrators

AOM-100 SERIES

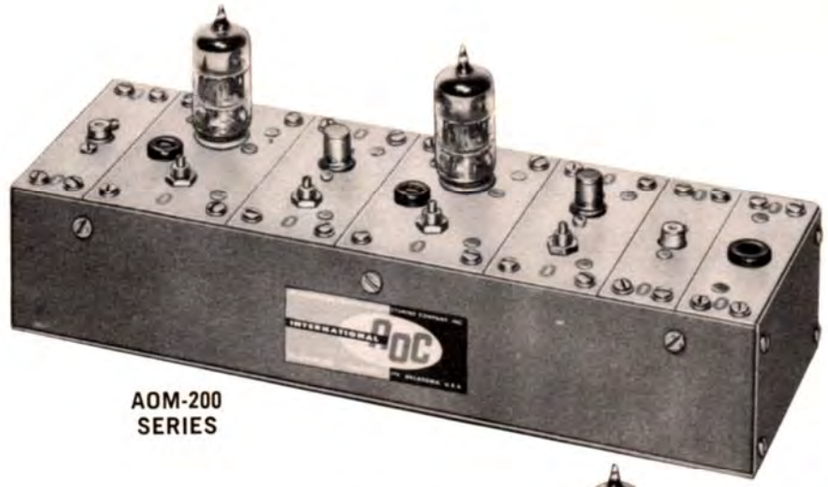

AOM-200 SERIES

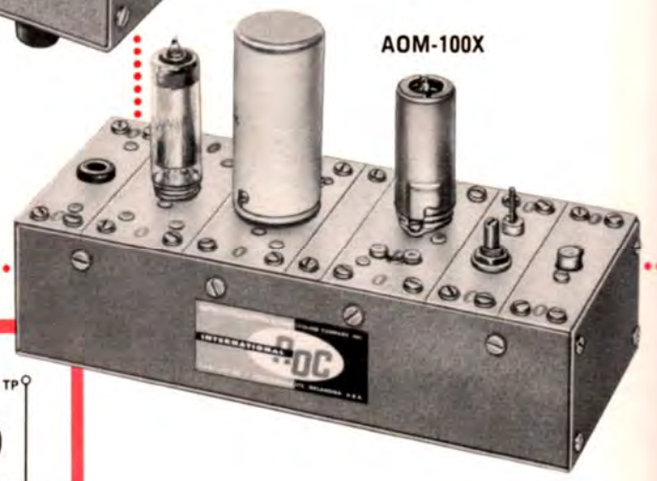

AOM-100X

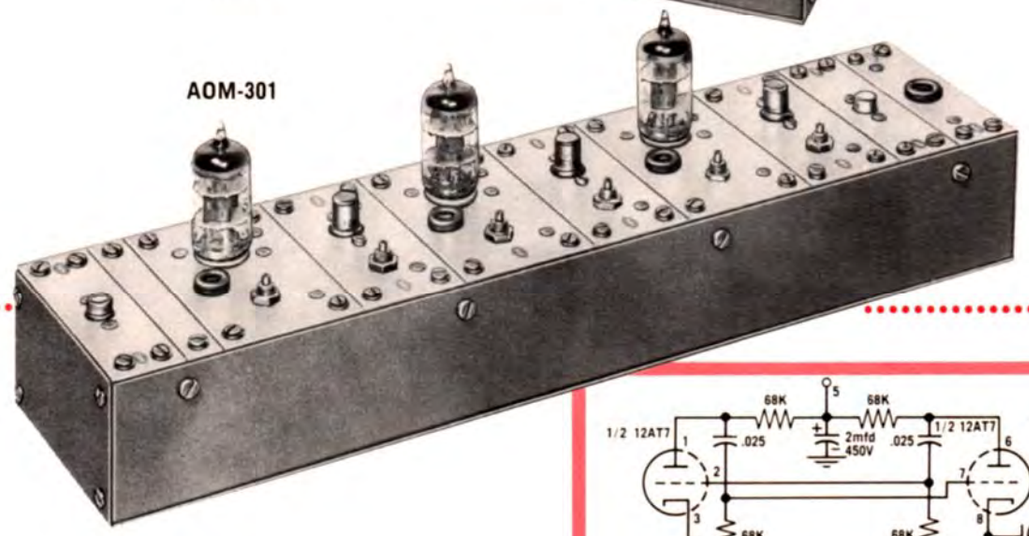

AOM-301

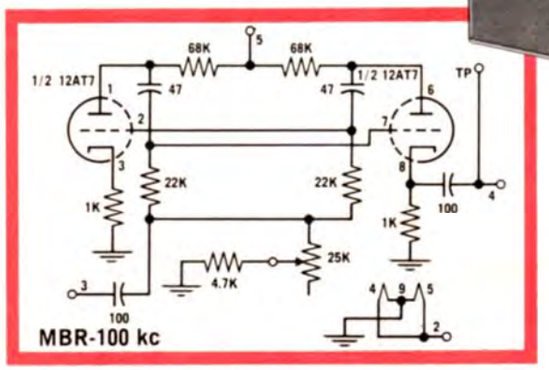

MBR-100 kc

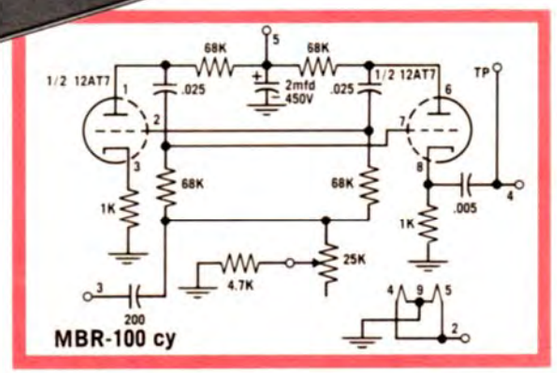

MBR-100 cy

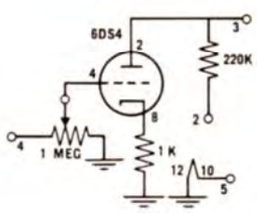

AD-05

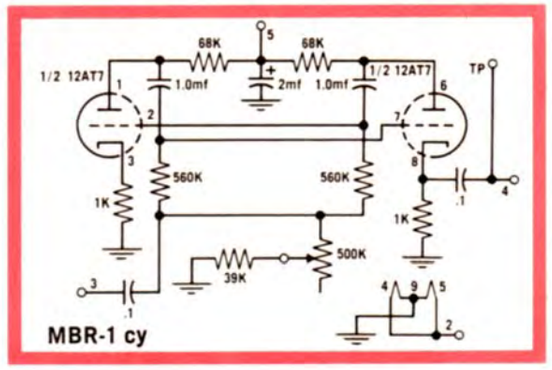

MBR-1 cy

AOC Multivibrators are free running sawtooth oscillators designed to lock on a stabilized signal source for division of 10.

Multivibrator units may be obtained in a number of combinations or single units. Each multivibrator has isolation amplifier to stabilize lock. Complete series allows 1,000 kc crystal to produce a 1 cycle per second pulse. Both 1,000 kc and 100 kc crystal oscillator units are available.

Crystal oscillators AOM-100X and AOM-1000X provide a stabilized signal source to drive the multivibrator chain. Each oscillator has regulator tube and crystal oven to insure maximum stability. Short term stability, 1 part in 10^8.

UNIT	DESCRIPTION	PRICE
AOM-101	100 kc	$19.95
AOM-102	10 kc	19.95
AOM-103	1 kc	19.95
AOM-104	100 cps	19.95
AOM-105	10 cps	19.95
AOM-106	1 cps	19.95
AOM-201	100 kc and 10 kc	35.00
AOM-202	10 kc and 1 kc	35.00
AOM-301	100 cps, 10 cps, 1 cps	49.50
AOM-100X	100 kc oscillator	32.50
AOM-1000X	1,000 kc oscillator	32.50

Shipping weight: 5 lbs. each

INTERNATIONAL

AOC single sideband filters

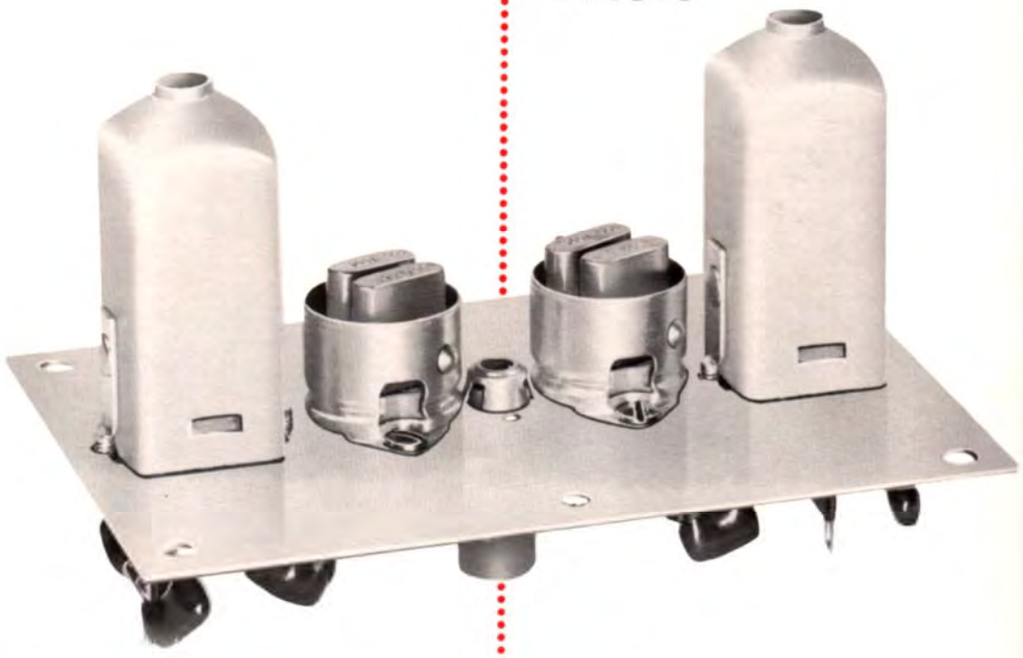

AOC Crystal filter units are designed for 3 kc bandpass and may be used for receiver or transmitter application in single sideband construction. Filters are complete with input and output transformers thus eliminating the match and tune-up problem. Inputs may be connected for balanced or unbalanced feed. Rejection of sideband increases with the number of crystals in filter. For example, 30 db for two crystals to 55 db or better with six crystals. Input may be fed from single or balanced plate circuit. Output feeds single high impedance grid. All units are wired and tested.

ACF-2

Two-crystal filter circuit using low impedance link input and 2K resistive output load. Unwanted sideband rejection greater than 30 db. Mounting space 1½". Shipping weight: 2 lbs.

Cat. No. ACF-2 ..... **$9.95**

ACF-4

Four-crystal filter circuit using nominal 600 ohm input and output. Unwanted sideband rejection greater than 40 db. Mounting space 2".
Shipping weight: 2 lbs.

Cat. No. ACF-4 ..... **$18.95**

ACF-6

Six-crystal filter circuit using nominal 600 ohm input and output. Unwanted sideband rejection greater than 55 db. Mounting space 3". Shipping weight: 2 lbs.

Cat. No. ACF-6 ..... **$27.95**

Matching oscillator crystals for the ACF filter series. Recommended for use in OS-4 or OS-42 oscillators.

Cat. No. CY-6-9LO **$4.40**
Cat. No. CY-6-9HI **4.40**

IMPORTANT INFORMATION REQUIRED ON VARIOUS MAKES OF COMMERCIAL EQUIPMENT

MOTOROLA:

Crystals can only be properly correlated for Motorola equipment if the crystal type number is given. Example: D02, R28, D03, etc. In cases where crystals are required for type D-14, 800 and 801 holders, always specify crystal frequency or the high IF frequency. Check whether the crystals are to be used in ovens.

GENERAL ELECTRIC:

Specify model number of transmitter and receiver RF Decks. Example: 4ES13A3, 4ER24B1, 4ET5B3, etc. When ordering crystals for 450 MC equipment specify:

Transmitter Crystals:

A. If they are heated or non-heated.

Receiver Crystals:

A. If they are heated or non-heated.

B. If the unit is AFC or NON-AFC Controlled.

C. Platter number of present receiver deck.

R.C.A.:

Specify model number of unit or MI Number of the crystal. Always indicate whether crystals are to be non-heated or heated type.

BENDIX:

Specify Bendix crystal part number (MX) as well as model number of equipment when placing order. Also indicate if for oven use.

OTHERS:

Specify model number of the receiver and transmitter as well as any formulae that pertain to the correct crystal calculation.

REMEMBER:

Any crystal will not work properly in every make of commercial equipment. The crystal must be correlated for particular oscillator that it is to be used in. When the crystal frequency is specified the customer should indicate if a check of calculations should be made.

INTERNATIONAL CRYSTAL MFG. CO., INC. will furnish equivalent crystals to meet specifications set forth by manufacturers of commercial two-way radio equipment.

COMMERCIAL CRYSTAL

ORDER FORM

INTERNATIONAL

CRYSTAL MFG. CO., INC.

18 NO. LEE · OKLA. CITY, OKLA. 73102

ORDERED BY

NAME _____

STREET ADDRESS _____

CITY _____ STATE _____ ZIP _____

SHIP TO

NAME _____

STREET ADDRESS _____

CITY _____ STATE _____ ZIP _____

ITEM NO.	QUANTITY	OPERATING FREQUENCY	CRYSTAL FREQUENCY	INTERNATIONAL HOLDER TYPE (SEE BELOW)	TEMP. OF OVEN IF USED	EQUIPMENT MAKE & MODEL MANUFACTURERS CRYSTAL TYPE NUMBER (SEE REVERSE SIDE)
1.						
2.						
3.						
4.						
5.						
6.						
7.						
8.						
9.						
10.						

Purchase Order No. _____ must be signed by authorized person.

_____

CHECK HOW YOU WANT ORDER SHIPPED:

☐ BEST WAY ☐ AIR MAIL ☐ AIR EXPRESS ☐ PARCEL POST ☐ SPECIAL DELIVERY

Postage only will be prepaid in United States when cash accompanies order. All other orders are shipped F.O.B. Oklahoma City.

ORDERS FROM OUTSIDE UNITED STATES: Include sufficient remittance to cover shipping costs.

TERMS

☐ **CASH (Oklahoma residents add 2% Sales tax)**

☐ **C.O.D., Orders of $25.00 or more require ⅓ deposit.**

☐ **OPEN ACCOUNT**
(You must have previously established credit with us)

INTERNATIONAL HOLDER TYPES

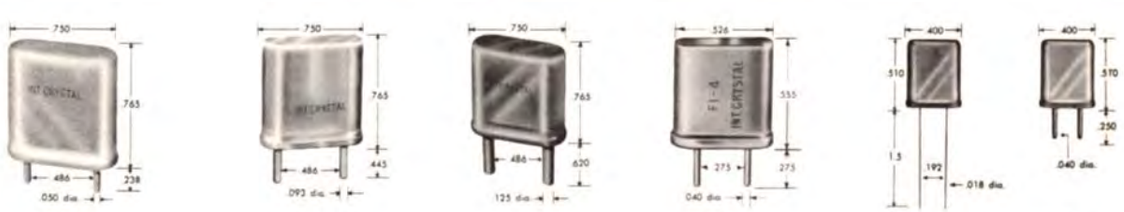

ORDER FORM

- AMATEUR CRYSTALS
- CITIZENS RADIO CRYSTALS
- EQUIPMENT
- SUBASSEMBLIES

INTERNATIONAL

CRYSTAL MFG. CO., INC.

18 NO. LEE · OKLA. CITY, OKLA. 73102

ORDERED BY:

NAME _____

ADDRESS _____

CITY _____ STATE _____ ZIP _____

SHIP TO:

NAME _____

ADDRESS _____

CITY _____ STATE _____ ZIP _____

CHECK HOW YOU WANT THIS ORDER SHIPPED

☐ Best Way ☐ Air Mail ☐ Spec. Delivery
☐ Air Express ☐ Parcel Post ☐ Motor Freight

All equipment is shipped F.O.B. Oklahoma City. Enclose sufficient remittance to cover postage. Express and motor freight shipments will be made collect.

TERMS

☐ CASH (Oklahoma residents add 2% Sales tax).

☐ C.O.D., Orders of $25.00 or more require ⅓ deposit.

☐ OPEN ACCOUNT
(You must have previously established credit with us).

QUANTITY	CATALOG NUMBER	EQUIPMENT DESCRIPTION	CRYSTALS SPECIFY FREQUENCY AND TYPE FUND. OR OVERTONE	UNIT PRICE	TOTAL

Total Amount of Order	
Oklahoma Residents Add 2% Sales Tax	
Amount for Postage	
Amount for Ins./Spec. Del.	
Total	

HOW TO ORDER EQUIPMENT

Please supply sufficient information with order to facilitate accurate processing. Shipments can be made on open account F.O.B. Oklahoma City only after credit has been approved by International Crystal Mfg. Co., Inc. On C.O.D. orders of $25 or more, ⅓ down payment is required. Include in check or money order sufficient postage and insurance for your parcel post zone. Check catalog for shipping weights on all equipment. All prices are subject to change without notice.

Orders From Outside Continental United States: Include sufficient remittance to cover shipping costs. All prices are subject to change without notice.

AOC transmitter/exciters

AOT-SS9

The International AOT-SS9 exciter unit is designed for use with a single sideband transmitter. The unit produces 9 mc upper or lower sideband signal for converting to other frequencies. It has a low impedance output and provides 50 db or better carrier and sideband suppression. Contains ACF-6, six-crystal filter.

Completely wired. Shipping weight: 5 lbs.
Cat. No. AOT-SS9 ..... **$57.50**

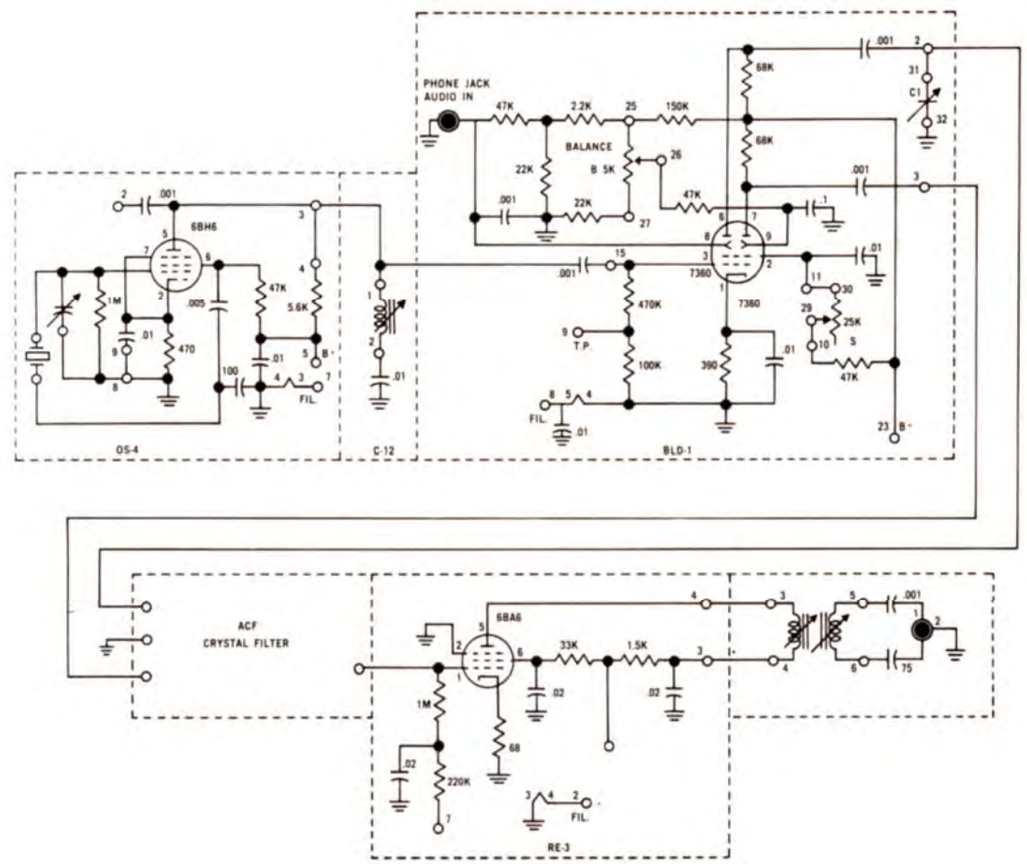

VHF...UHF Unitized transmitters 50 mc to 420 mc

International's new unitized VHF/UHF transmitters make it extremely easy to get on the air in the 50-420 mc range with a solid signal. Start with the basic 50 or 70 mc driver. For higher frequencies add a multiplier-amplifier. All units are completely wired. Plug-in cables are used to interconnect the driver and amplifier.

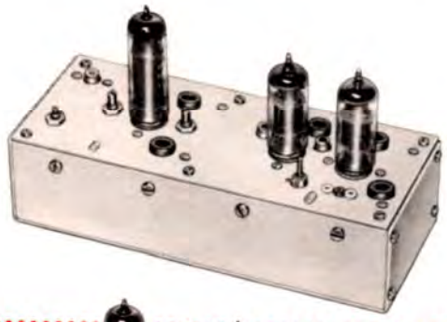

AOD-57

DRIVER/TRANSMITTER for 50 or 70 mc

The AOD-57 completely wired with one 6360 tube, two 12BY7 tubes and crystal (specify frequency). Heater power: 6.3 volts @ 1.2 amps. Plate power: 250 vdc @ 50 ma. Shipping weight: 5 lbs.

Cat. No. AOD-57 ..... **$69.50**

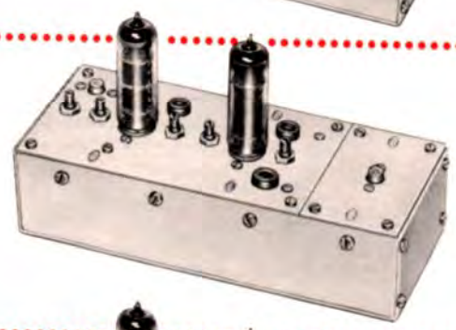

AOA-144

MULTIPLIER/AMPLIFIER for 144 mc

The AOA-144 uses two 6360 tubes providing 6 to 10 watts output. Requires AOD-57 for driver. Heater power: 6.3 volts @ 1.64 amps. Plate power: 250 vdc @ 180 ma. Shipping weight: 5 lbs.

Cat. No. AOA-144 ..... **$39.50**

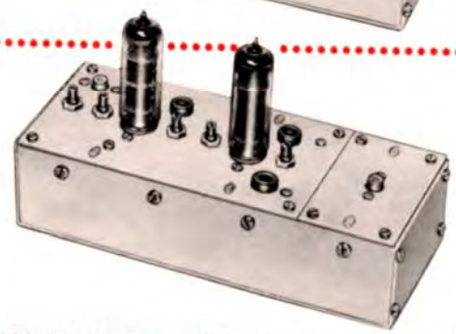

AOA-220

MULTIPLIER/AMPLIFIER for 220 mc

The AOA-220 uses two 6360 tubes providing 6 to 8 watts output on 220 mc. Requires AOD-57 for driver. Heater power: 6.3 volts @ 1.64 amps. Plate: 250 vdc @ 150 ma. Shipping weight: 5 lbs.

Cat. No. AOA-220 ..... **$39.50**

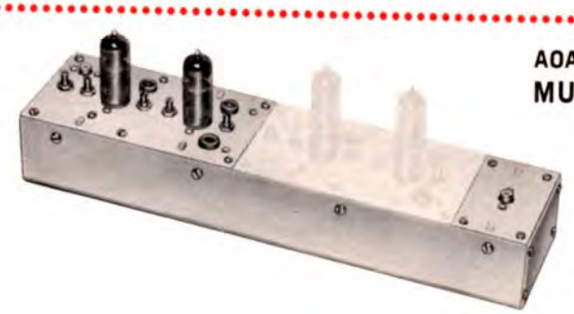

AOA-420

MULTIPLIER/AMPLIFIER for 420 mc

The AOA-420 uses two 6939 tubes providing 4 to 8 watts output on 420 mc. Requires AOA-57 plus AOA-144 for drive. Heater: 6.3 volts @ 1.2 amps. Plate: 220 vdc @ 130 ma. Shipping weight: 5 lbs.

Cat. No. AOA-420 ..... **$69.50**

AMD-10

MODULATOR

The AMD-10 is designed as a companion unit to the AOA series of transmitters. Uses 6AN8 speech amplifier and driver, 1635 modulator. Output: 10 watts. Input: crystal mic. (High Imped.) Requires 300 vdc 20 ma, no signal, 70 ma peak: 6.3 vac @ 1.05 amps. Shipping weight: 5 lbs.

Cat. No. AMD-10 ..... **$24.50**

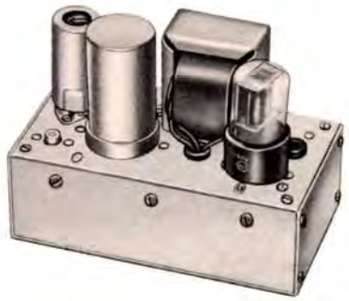

ARY-4

RELAY BOX

Four circuit double throw. Includes coil rectifier for 6.3 vac operation. Shipping weight: 3 lbs.

Cat. No. ARY-4 Relay Box **$12.50**

APD-610

FILAMENT SUPPLY

The APD-610 provides 6.3 vac @ 10 amperes. Shipping weight: 7 lbs.

Cat. No. APD-610 ..... **$9.50**

COMPLETE TRANSMITTER

6 METERS 50 mc AOD-57

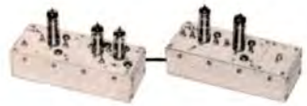

2 METERS 144 mc AOD-57 + AOA-144

220 mc AOD-57 + AOA-220

420 mc AOD-57 + AOA-144 + AOA-420

INTERNATIONAL

transistor subassemblies

TRT-2

TRB-1

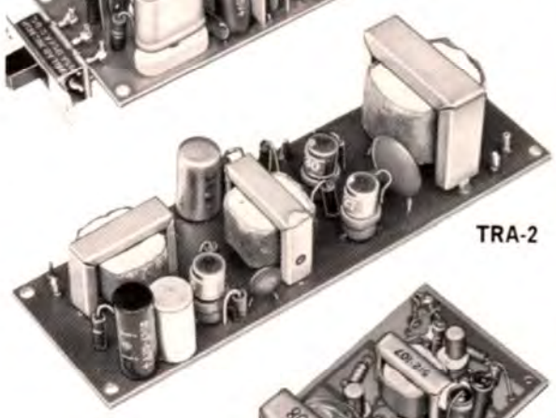
TRA-2

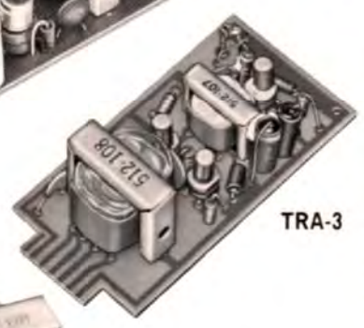
TRA-3

TRA-4

TRA-5

TRT-2 transmitter

For 10 meters or Citizens band with switch for two frequencies. Crystal controlled. Three transistors provide output of 100 milliwatts. Power stage uses special HF transistors. TRA-2 unit may be used for modulation. Shipping weight: 2 lbs.
Wired and tested, less crystals and transistor.
Cat. No. 200-118 ..... **$10.00**
Transistor Kit Cat. No. 150-180 ..... **9.00**
Crystals, type FCB for Citizens band (.0025%) ..... each **4.75**
Crystals, type FA-5 for Amateur (.01%) ..... each **4.40**

TRB-1 mixer IF unit

Six transistors, 2 diodes with 6 mc RF amplifier and mixer. Crystal controlled local oscillator. 455 kc IF. Highly effective noise limiter and squelch. Combined witih TRC-1 converter and TRA-2 audio units makes dual conversion superheterodyne receiver. Input 6 mc standard. Specify frequency. Requires 15 vdc @ 10 ma. Wired and tested with crystals. Shipping weight: 2 lbs.
Cat. No. 300-131 ..... **$32.50**
Special frequency (with one crystal only)
Cat. No. 300-142 ..... **37.50**

TRA-2 audio unit

Three transistors. Input 100,000 ohms and 50 ohms. Speech amplifier for dynamic microphone. Push-pull power amplifier using class B output stage. 500 ohm output for modulation, 3.2 ohm output for speaker. Output 300 milliwatts. Idle current 10 ma. Peak current 80 ma @ 15 vdc. Wired and tested. Shipping weight: 2 lbs.
Cat. No. 400-104 ..... **$14.50**

TRA-3 audio amplifier (300 milliwatt)

Plug-in type amplifier mounting in the "T" series type socket provides the same output as the TRA-2. Three transistors, the TRA-3 uses RC input for operation from 1 kc to 100 kc source. Shipping weight: 2 lbs.
Cat. No. 400-124 ..... **$11.75**

TRA-4 audio amplifier (3 watt)

Plug-in double "T" series mount. This all transistor unit provides 3 watts output with 14 vdc at 750 ma. Operating class A the TRA-4 requires .011 vac input at 1000 cps for 3 watts output. When used with the TRA-5 preamplifier only .0006 vac input is required for 3 watts out. Output 4 ohm speaker or 10,000 ohm modulation winding. Response 400-4000 cps. Shipping weight: 2 lbs.
Cat. No. 400-125 ..... **$15.75**

TRA-5 audio preamplifier

Low level audio preamplifier with plug-in mounting with MT-1 or MT-2 mounting hardware. Voltage gain 35 db. Maximum input .05 vac. Response 400-4000 cps. Requires 14 vdc @ 2 ma (may be operated at lower voltage). Shipping weight: 2 lbs.
Cat. No. 400-126 ..... **$5.95**

TRT-1 transmitter

The TRT-1 is a transistorized transmitter for Citizens Radio or Amateur use. Uses 2N2189 oscillator and 2N2189 amplifier. Output: 25 MW. Output impedance: 50 ohms. Power requirements: 9 vdc @ 10 ma maximum. Crystal: 3rd overtone series resonant. Type F-605 ± .0025%.
Order for specific Citizens Radio channel or frequency within 10 meter Amateur band. Shipping weight: 2 lbs.
Cat. No. 200-129 ..... **$12.50**

AOS-A1 transistor audio oscillator

Mounted on a "T" series printed circuit board, the AOS-A1 audio oscillator either high impedance or low impedance outputs at 1000 cps plus or minus 10 percent. The AOS-A1 will operate from 1.5 vdc to 9 vdc. At 6 vdc current required is 45 ma. Outputs low (220 ohm load) 1.0 vac and high (100 k load) 30 vac. Distortion less than 6 percent. Shipping weight: 2 lbs.
Cat. No. 400-127 ..... **$9.95**

TRC-4 transistor converter

The TRC-4 crystal controlled three transistor converter is available for special frequencies in the range 2 mc to 54 mc. Supplied with IF output to tune standard BC band. Power: 12 to 15 vdc with positive or negative ground. Can be supplied with 6 mc IF for use with TRB-1 Mixer IF Unit (page 16). Specify frequency when ordering. Shipping weight: 2 lbs.
2 mc to 54 mc Cat. No. 300-152 ..... **$16.50**

TRC-5 transistor converter

Crystal controlled three transistor converter for VHF frequencies. Available on special order. Each unit covers any 1 mc band of frequencies between 50 mc and 160 mc. Standard IF output for 600 to 1,600 kc. Power: 12 vdc @ 10 ma. Can be supplied with 6 mc IF for use with TRB-1 Mixer IF unit. Shipping weight: 2 lbs.
54 to 160 mc Cat. No. 300-154 ..... **$22.50**

converter case

Special case for TRC-4 or TRC-5 Converters. Kit includes aluminum case, switch, power cord, hardware, mounting brackets for under-dash installation in car or truck. Shipping weight: 2 lbs.
Cat. No. 150-162 ..... **$4.95**

mobile converter

International Mobilette 61 all transistor converter complete. Wired and tested.
Available on special order.

TRT-1

AOS-A1

TRC-4

TRC-5

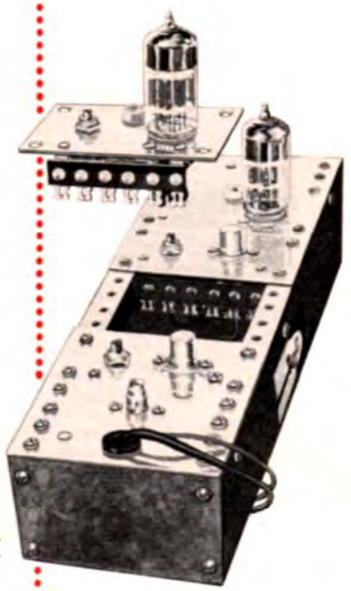

information about

INTERNATIONAL

ADD ON CIRCUITS

The basic concept of A O C (Add On Circuit), is to have each unit a primary circuit in itself. By interconnecting several of these units a complete piece of electronic equipment may be made. This piece of equipment so constructed may be changed at a later date to include different circuits for better performance or to increase its functions.

The scope of A O C is almost unlimited and every attempt will be made to cover requirements in all fields of electronics. If however, you do not find the A O C unit you require please write International Crystal describing your needs and we will cooperate with you in every way that we can to supply you with a suitable circuit unit.

A data sheet is enclosed with each A O C unit describing its function, power requirements, and interconnecting points. All A O C units are designed to mount in multiples of one-half inch. Plug-on power leads with molded connector shielded cable for RF and audio signals give A O C versatility. All circuits are designed for noncritical operation to insure a minimum of alignment problems. Although a basic knowledge of circuits is desirable, it is not necessary. International will supply lists of recommended groups of A O C units for constructing various receivers, transmitters, etc.

Hookup wire is supplied with each of the various cases available. To complete the assembly, you will require a small soldering iron (60 to 100 watts), rosin core solder, a pair of long nose pliers, a pair of cutting pliers, and a screwdriver (approx. 4-in. size). When using A O C data sheets note the voltages, and currents required for each unit. Add these for the total power requirements for your complete circuit. Add the lengths of each A O C unit to determine the size case required.

When designing your equipment it is recommended that you provide circuit isolation by mounting the various sections in different cases and interconnecting them with the shielded cables available. For example, when constructing a receiver, mount the RF and mixer circuits in one case, oscillator in another, IF amplifier, detector and audio in another.

International Add-On Circuits are also available as completely assembled converters, oscillators, transmitters, etc.

INTERNATIONAL

AOC

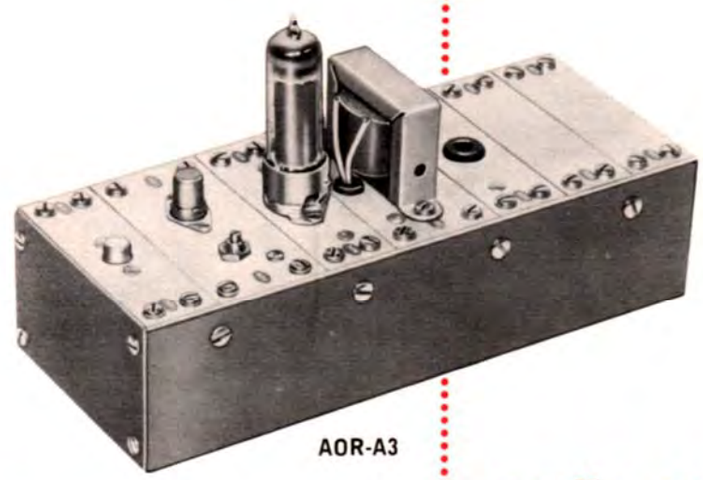

AOR-A3

SPEAKER

audio amplifier

The AOR-A3 is a 3-watt Audio Amplifier which has a response of 400 to 6,000 cps ± 3 db. Output has 3-4 ohm speaker winding, 10,000 ohm hi-impedance winding for modulating low power transmitter. Requires approximately .1 volt audio input. Specifications: AD-02 driver (6DS4 nuvistor), AP-3 amplifier (6AQ5), and TA-5 transformer. All units mounted in natural aluminum finish cases. Wired. Shipping weight: 5 lbs.

Cat. No. AOR-A3 ..... **$19.00**

Matching 4″ speaker with ferrite magnet. Complete with natural aluminum finish case. Swivel mount. Shipping weight: 2 lbs.

Cat. No. ASK-4 ..... **$8.95**

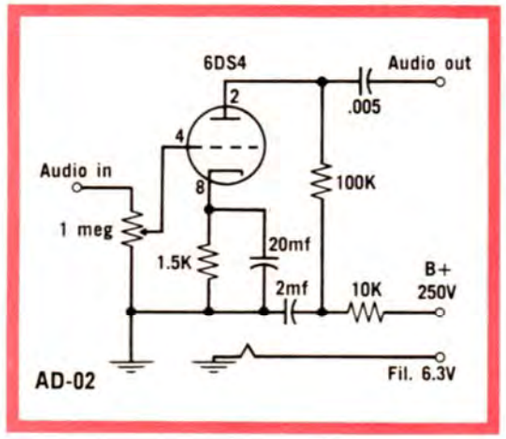

AD-02

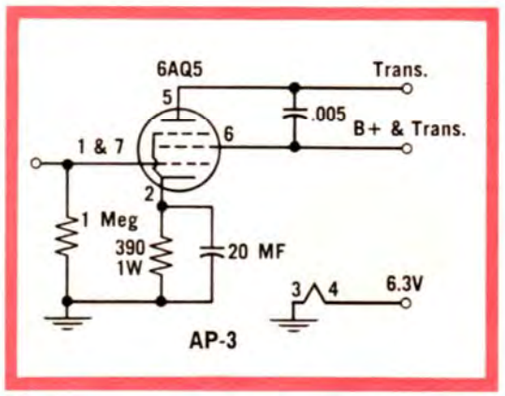

AP-3

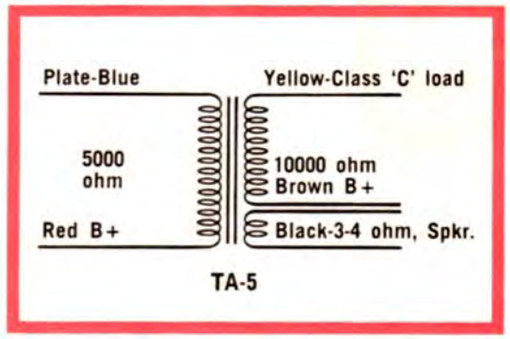

TA-5

AOC converters

AOR-C1

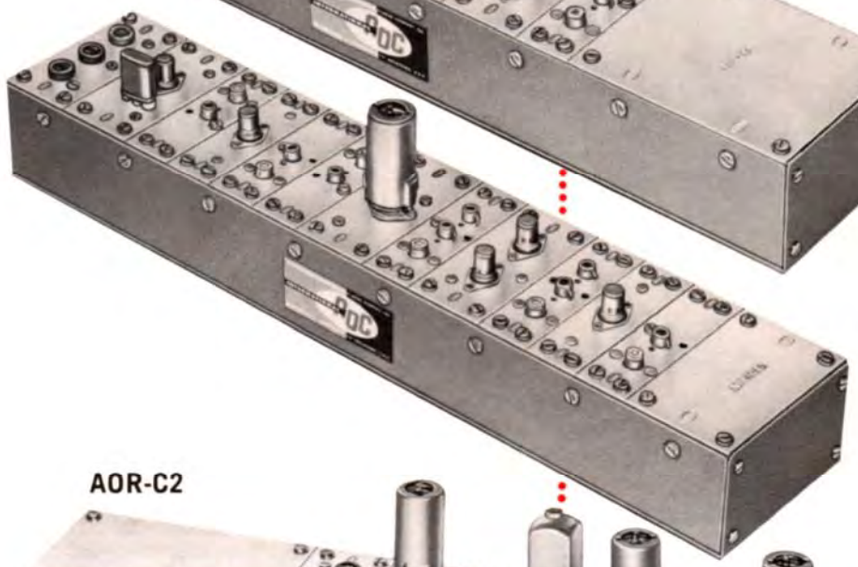

AOR-C12

AOR-C2

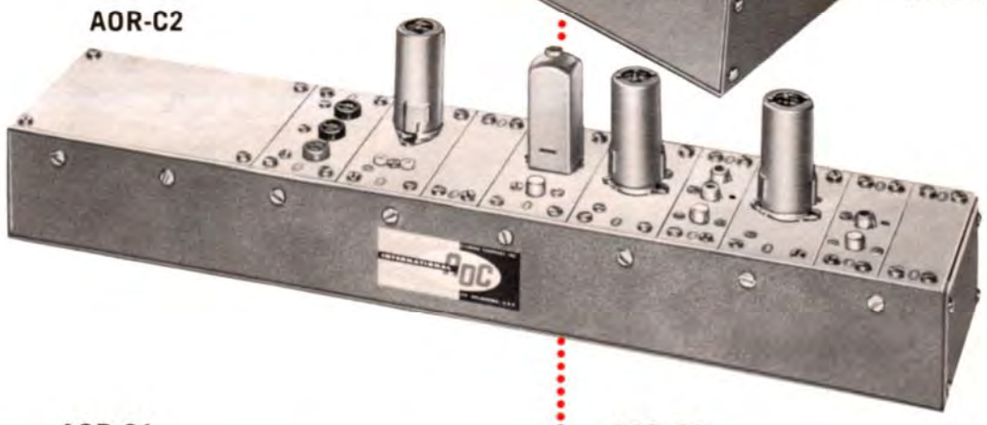

AOR-C1
The AOR-C1 is a crystal controlled RF converter using one stage of RF amplification. Cascode nuvistor RF amplifier/driver, 6BH6 mixer. Output IF 10.7 mc. The input range may be ordered to cover any 200 kc range between 30 mc and 200 mc. Oscillator uses 6BH6 and 6DS4 multiplier. Natural aluminum finish case. Wired. Crystal tuned for customer specified input signal. Shipping weight: 5 lbs.
Cat. No. AOR-C1 ..... **$57.00**

AOR-C2
The AOR-C2 is a medium frequency converter which may be used for antenna input or as a first IF and second converter in dual conversion circuits. Input may be ordered to cover any 200 kc range between 2 mc and 30 mc. Output IF 455 kc. Tube lineup: 6BH6 RF amplifier, 6BH6 mixer, and 6BH6 oscillator. Completely wired. Natural aluminum finish case. Shipping weight: 5 lbs.
Cat. No. AOR-C2 ..... **$47.00**

AOR-C12
The AOR-C12 is a crystal controlled RF converter using two stages of RF amplification. Specifications: First nuvistor grounded grid and second cascode nuvistor. These two stage drive a 6BH6 mixer. Output IF 10.7 mc. The input range may be ordered to cover any 200 kc range between 30 mc and 200 mc. Oscillator uses a 6BH6, and 6DS4 multiplier where required. Completely wired. Natural aluminum finish case. Shipping weight: 5 lbs.
AOR-C12 with crystal tuned for customer specified input signal.
Cat. No. AOR-C12 ..... **$64.00**

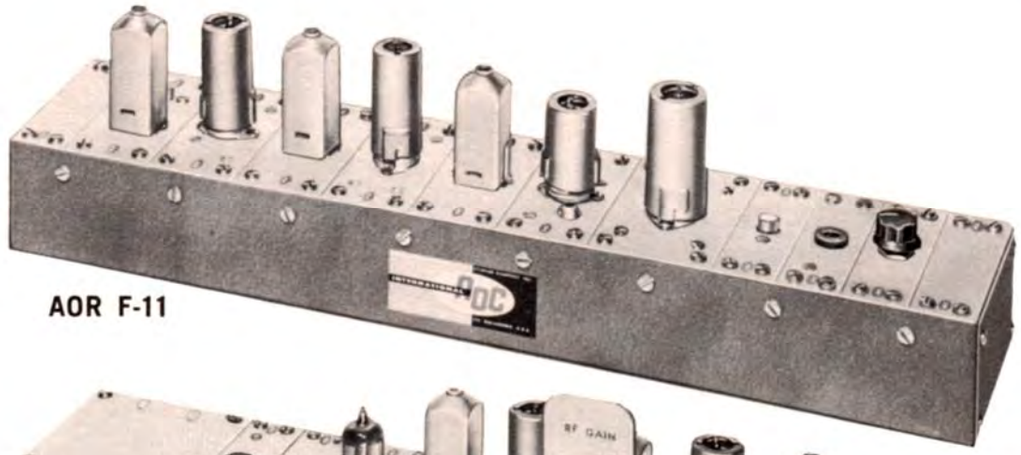

AOR F-11

AOR F-21

if amplifiers and detectors

International AOC IF Amplifiers are available for AM, FM reception. The five units described on this page are shipped completely wired and tested.

AOR F-11
The AOR F-11 IF Amplifier is designed for the reception of FM signals. Specifications: IF amplifier, noise limiter, discriminator, first audio and squelch. 455 kc for 5 to 10 kc deviation signals. Shipping weight: 5 lbs.
Cat. No. AOR F-11 ..... **$42.00**

AOR F-21
IF amplifier units for reception of AM signals. Specifications: Two stage IF amplification, detector, noise limiter, first audio, and squelch. Shipping weight: 5 lbs.
Cat. No. AOR F-21 (455 kc IF) **$42.00**

INTERNATIONAL

AOC

power supplies

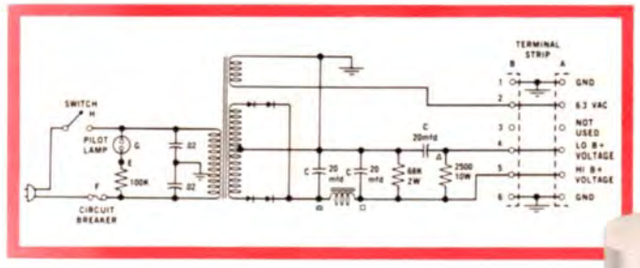

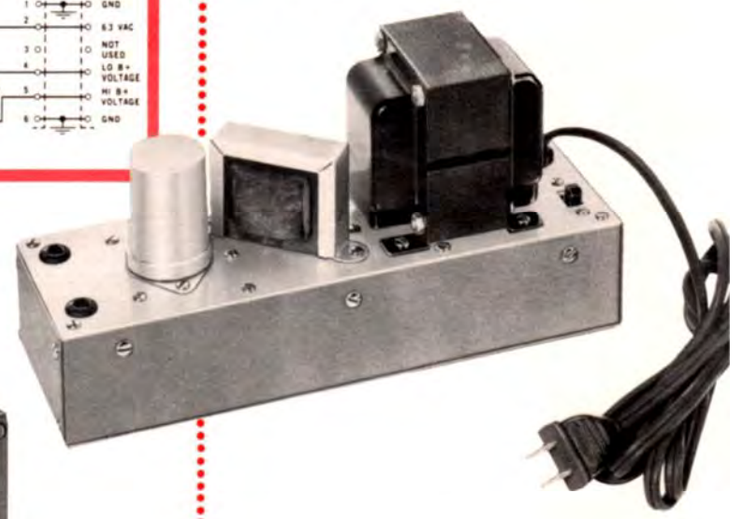

AOP-100

AOP-200

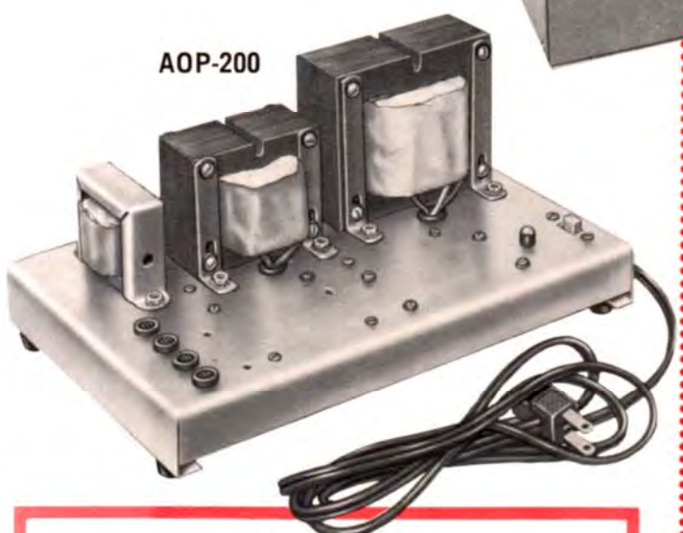

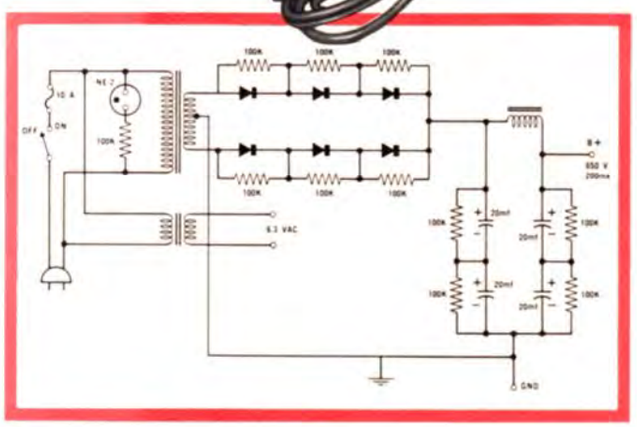

International AOC power supplies operate from 115 vac and are designed to supply all equipment constructed from AOC assemblies. Silicon rectifiers provide large currents with a small voltage drop across the rectifier section. Both power supplies listed are complete with case, line protector, and AC switch.

AOP-100

Provides 350 volts dc (150 ma intermittent or 100 ma continuous), 6.3 volts ac @ 5 amps. Shipping weight: 10 lbs.

Cat. No. AOP-100 ..... **$18.50**

AOP-200

Provides 650 volts dc @ 200 ma, 6.3 volts ac @ 10 amps. Shipping weight: 20 lbs.

Cat. No. AOP-200 ..... **$32.50**

INTERNATIONAL

AOC

voltmeter

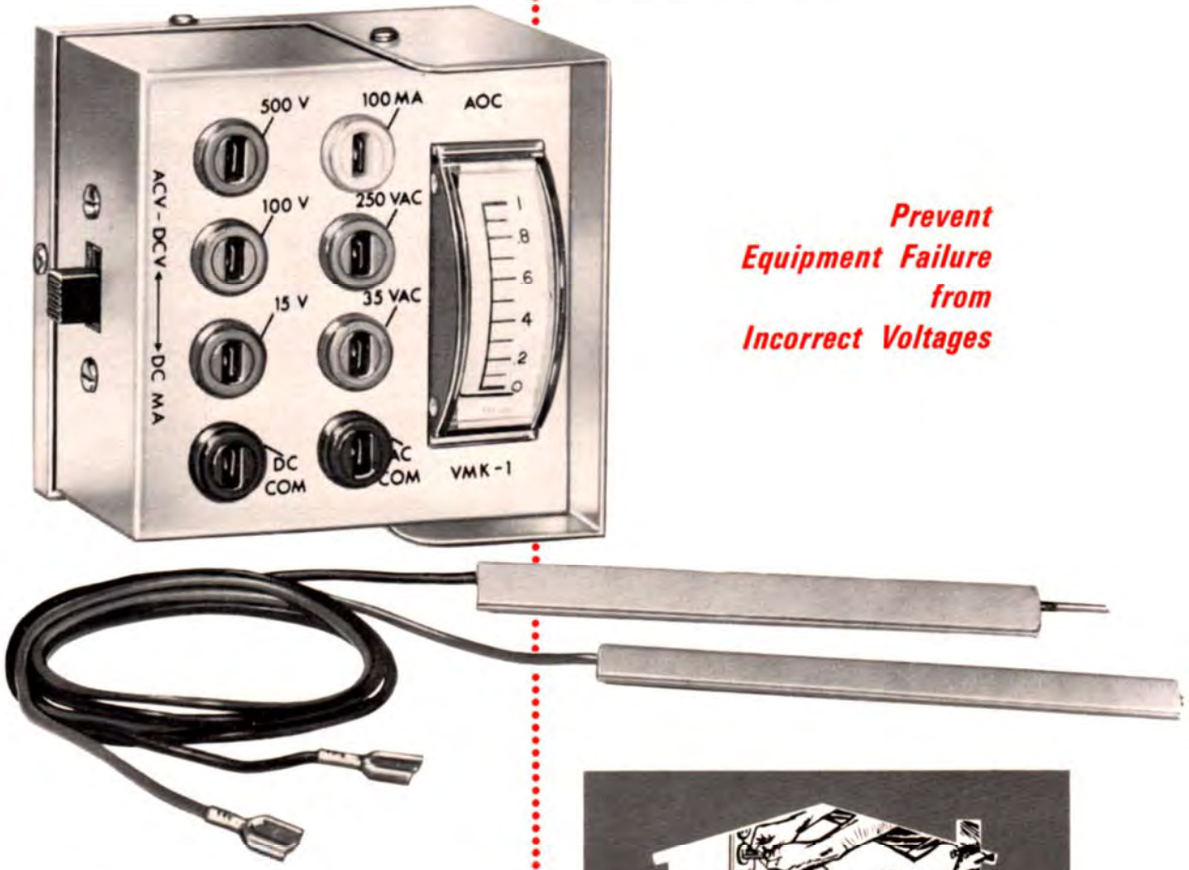

Prevent Equipment Failure from Incorrect Voltages

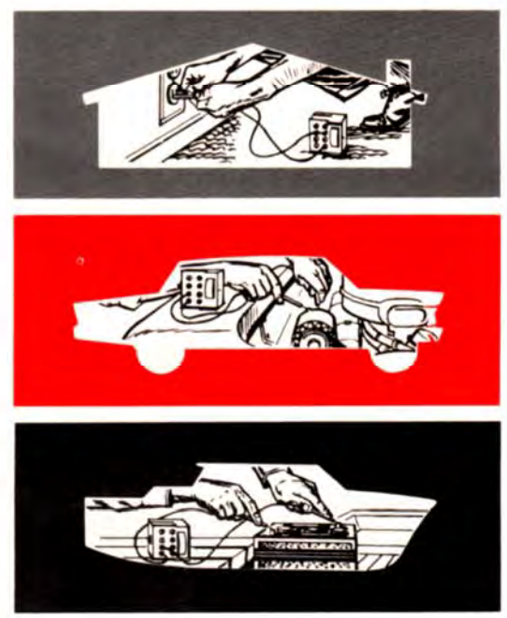

VMK-1

This compact test instrument will measure DC voltages from 0 to 500 volts, AC voltages from 0 to 250 volts, DC milliamperes from 0 to 100 milliamperes. Accuracy within ± 10 percent. Dimensions 3″ x 3″ x 2″. Check voltages from batteries, generators, AC power sources, etc. This handy VMK-1 voltmeter will be a welcome addition to the home, workshop, office, boat or car. Shipping weight: 2 lbs.

Kit, complete with test probes **$7.95**

Wired, complete with test probes **9.95**

INTERNATIONAL

AOC

audio power

CATALOG NO.	DESCRIPTION	MAX FREQ RECOMMENDED	TUBE	PLATE VOLTS/MA	FILAMENT VOLTS/MA	MOUNTING	PRICE
AP-3	Audio Power Amplifier 3 Watt Class A	Audio	6AQ5	250/50	6.3/.45	SE/1"	$2.95
AP-5	Audio Power Amplifier 5 Watt Class A	Audio	6BQ5	250/45	6.3/.76	SE/1½"	3.40
AP-10	Audio Power Amplifier 10 Watt Class B	Audio	1635	300/60	6.3/.6	SE/1½"	4.25

audio voltage

CATALOG NO.	DESCRIPTION	MAX FREQ RECOMMENDED	TUBE	PLATE VOLTS/MA	FILAMENT VOLTS/MA	MOUNTING	PRICE
AD-01	Audio Driver	Audio	6DS4	250/1.6	6.3/135	SE/1"	$4.25
AD-02	Audio Driver with vol. cont.	Audio	6DS4	250/1.6	6.3/135	SE/1½"	4.95
AD-03	Two Stage preamp/driver	Audio	12AX7	250/1.0	6.3/300	SE/1½"	5.25
AD-04	Driver, two stage with preamplifier	Audio	6AN8	250/10	6.3/450	SE/1½"	5.25
AD-05	Audio Isolation for use with Multivibrators	1 cy-100 kc	6DS4	150/1	6.3/135	SE/1½"	6.50

rf power

CATALOG NO.	DESCRIPTION	MAX FREQ RECOMMENDED	TUBE	PLATE VOLTS/MA	FILAMENT VOLTS/MA	MOUNTING	PRICE
RP-25	Final Amp 50 Watt Input	30 mc	6DQ6	350/140	6.3/1200	SE/2"	$3.95
RPL-1	Linear Amplifier	30 mc	6CL6	250/30	6.3/650	SE/2"	7.95

rf voltage

NOTE — For tuned circuits to be used with these amplifier circuits see COILS and TRANSFORMERS IF

CATALOG NO.	DESCRIPTION	MAX FREQ RECOMMENDED	TUBE	PLATE VOLTS/MA	FILAMENT VOLTS/MA	MOUNTING	PRICE
RE-1	Grounded Grid Nuvistor	450 mc	6DS4	250/5	6.3/135	SE/1"	$3.95
RE-2	Cascode Nuvistor	170 mc	6DS4	250/7	6.3/270	SE/1½"	5.95
RE-3	Pentode for RF and IF	30 mc	6BA6	250/7	6.3/300	SE/1½"	4.15

Shipping weight: 1 to 5 units, 1 lb.

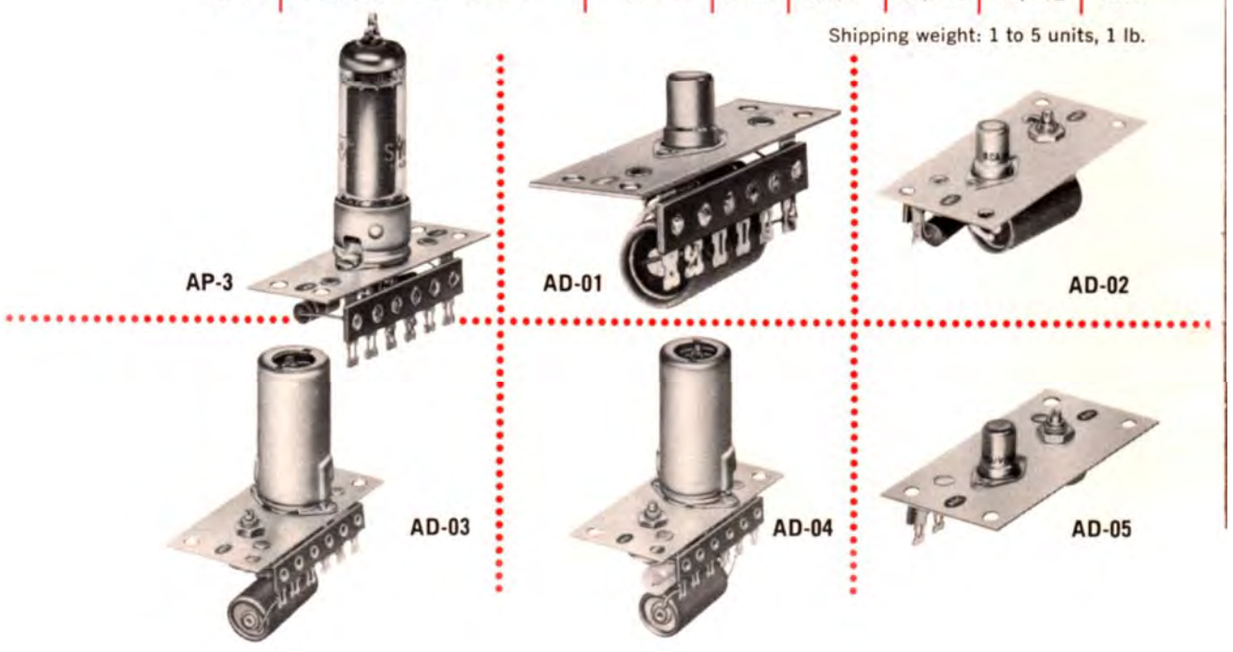

cables

CATALOG NO.	DESCRIPTION	PRICE
AB-6	6-inch shielded with molded phono plugs each end for RF and audio	$ .95
AB-15	15-inch shielded with molded phono plugs each end for RF and audio	1.05

cable, power harness

CATALOG NO.	DESCRIPTION	PRICE
PWR-1	Three sets of interconnecting wires with plug-on terminals each end. For connecting power between AOC units.	$1.45

capacitors, variable

CATALOG NO.	DESCRIPTION	MOUNTING	PRICE
CAV-203	Dual Section, Variable Capacitor 2.9-18 pfd, planetary drive complete with panel, scale, pointer and knob.	SE/2"	$7.80
CAV-230	Dual Section, Variable Capacitor 10-270 pfd, planetary drive complete with panel, scale, pointer and knob.	SE/2"	7.80
CMV-25	Mica compression capacitor 50 to 380 pfd with knurl ¼" shaft and screw drive slot.	SE/1"	1.60
CMV-06	Mica compression trimmer on plate and bracket 8-60 mfd. Screwdriver adjust.		1.60

cases

CATALOG NO.	DESCRIPTION	USABLE MOUNTING SPACE IN INCHES	PRICE
SE-4	All SE style cases are complete with mounting rails, hardware and hook-up wire. The SE case mounting plates have a width of 3¹⁄₁₆"and mounting hole centers of ½" or multiples thereof.	4	$4.45
SE-6		6	5.20
SE-8		8	5.95
SE-10		10	6.70
SE-12		12	7.45
SE-14		14	7.90
SE-16		16	8.95

Shipping weight: 1 to 5 units, 1 lb.

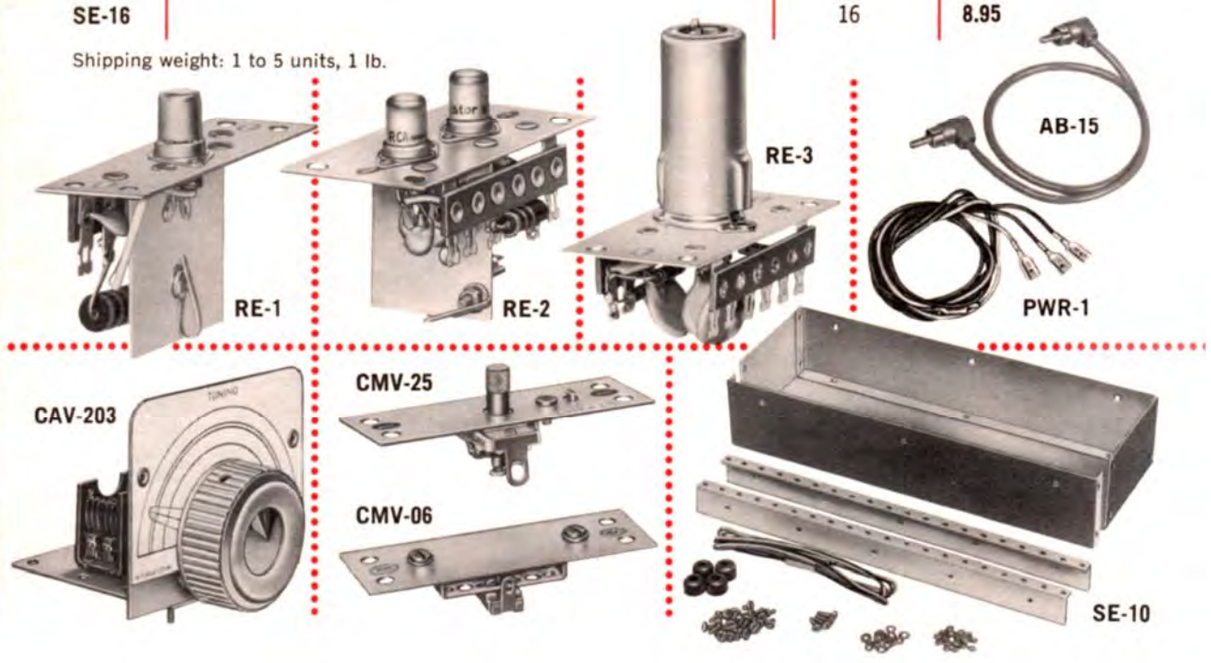

INTERNATIONAL

coil, kit

CATALOG NO.	DESCRIPTION	PRICE
CK-5	Contains five double coil plates with output jack and shield; ten ¼" slug tuned coil forms; two sizes wire for winding coils; fifteen capacitors and ten iron core slugs. Kit contains sufficient parts for making five double coil AOC units in the range of 3 mc to 200 mc.	$8.60

coils

TYPE	DESCRIPTION	MOUNTING	FREQUENCY RANGE	CATALOG NO.	PRICE
"10" Series Single Coil	Single slug tuned coil and plate with shield. Includes coupling link and jack. Comes complete with fixed capacitors as required to cover the specified range. May be used for input, output or interstage.	SE/1"	.5 mc-2 mc	C-8	$2.85
		SE/1"	2 mc-5 mc	C-10	2.65
		SE/1"	5 mc-20 mc	C-12	2.65
		SE/1"	20 mc-50 mc	C-14	2.65
		SE/1"	50 mc-100 mc	C-16	2.65
		SE/1"	100 mc-200 mc	C-18	2.65
"200" Series Double Coil	Two slug tuned coils, plate, and shield. Includes coupling link and jack on one coil. Comes complete with fixed capacitors as required to cover the specified range. May be used for input, output or interstage.	SE/1"	.5 mc-2 mc	C-208	$4.15
		SE/1"	2 mc-5 mc	C-210	3.95
		SE/1"	5 mc-20 mc	C-212	3.95
		SE/1"	20 mc-50 mc	C-214	3.95
		SE/1"	50 mc-100 mc	C-216	3.95
		SE/1"	100 mc-200 mc	C-218	3.95
Transmitter Pi-Network 50 Watt Plate Input 700 VDC Working	Includes coil, input and output capacitors, choke, blocking capacitor and shield. Designed to operate with the RP series of RF power amplifier plates.	SE/2"	1,800 kc-2,000 kc	CTP-302	$9.50
		SE/2"	3,500 kc-4,000 kc	CTP-304	9.50
		SE/2"	7,000 kc-7,300 kc	CTP-306	9.50
		SE/2"	14 mc-15 mc	CTP-308	9.50
		SE/2"	21 mc-22 mc	CTP-310	9.50
		SE/2"	26 mc-30 mc	CTP-312	9.50
		SE/2"	50 mc-54 mc	CTP-314	9.50
		SE/2"	144 mc-148 mc	CTP-316	9.50

Shipping weight: 1 to 5 units, 1 lb.

CK-5

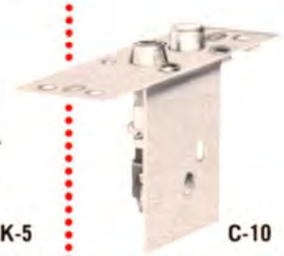
C-10

C-208

CTP-304

AOC

control, volume

CATALOG NO.	DESCRIPTION	MOUNTING	PRICE
VC-1	1 meg. Volume Control with mtgng bracket and knob	SE/1"	$1.95

crystals

CATALOG NO.	DESCRIPTION	TOLERANCE	FREQUENCY	PRICE
CY-6	Quartz crystal for use in AOC units. Include the following information with your order:	± .005%	200 kc-999 kc	$15.00
	(1) frequency		1,000 kc-2,000 kc	7.50
	(2) type AOC unit in which used		2,000 kc-60 mc	5.75
CY-6-1	6 meter converter crystal for 7 mc IF	± .01%	45.666 mc	4.40
CY-6-2	2 meter converter crystal for 7 mc IF	± .01%	43 mc	4.40

detectors

CATALOG NO.	DESCRIPTION	MAX FREQ RECOMMENDED	TUBE	FILAMENT VOLTS/MA	MOUNTING	PRICE
DE-1	AM Diode detector with AVC output	30 mc	9006	6.3/150	SE/1½"	$3.65
DE-2	Grid Leak Detector	30 mc	6BH6	6.3/150	SE/1½"	4.15
DE-3	Regenerative Detector/1st Audio Amplifier with Volume Control	30 mc	6U8	6.3/450	SE/1½"	5.95
DE-4	FM Discriminator	30 mc	6AL5	6.3/300	SE/1½"	4.25
DE-5	FM Ratio Detector	30 mc	6AL5	6.3/300	SE/1½"	3.65
DE-6	AM Detector with noise limiter	30 mc	6AL5	6.3/300	SE/1½"	4.50

hardware

CATALOG NO.	DESCRIPTION	PRICE
HW-1	100 4-40x¼ MCH screw, 100 4-40 hex nut, 100 #4 lock washer spare mounting bolts for AOC units.	$1.45
HW-16	Two pieces extruded aluminum angle 16" long with punch holes ½" center one side and tapped #6 holes on 2" center other side. Same as used in AOC cases to hold AOC units.	2.95

Shipping weight: 1 to 5 units, 1 lb.

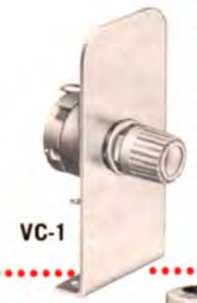
VC-1

CY-6

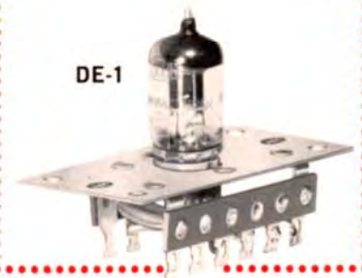
DE-1

DE-4

DE-5

HW-1

HW-16

INTERNATIONAL

limiter, rf voltage

CATALOG NO.	DESCRIPTION	MAX FREQ RECOMMENDED	TUBE	PLATE VOLTS/MA	FILAMENT VOLTS/MA	MOUNTING	PRICE
LM-1	Limiter Amplifier, RF Voltage	30 mc	6BA6	250/3	6.3/300	SE/1½"	$4.15

modulator

CATALOG NO.	DESCRIPTION	PRICE
BLD-1	Balanced modulator circuit for reducing carrier and producing AM Sidebands. Designed to operate into ACF filter with crystal driver from OS-4 or OS-42 oscillators. Carrier suppression can be adjusted to better than 50 db.	$9.95

mixers

CATALOG NO.	DESCRIPTION	MAX FREQ RECOMMENDED	TUBE	PLATE VOLTS/MA	FILAMENT VOLTS/MA	MOUNTING	PRICE
MX-1	RF low level signal mixer designed for link injection into grid coil.	200 mc	6BH6	250/1	6.3/150	SE/1½"	$4.15
MX-2	RF low level signal mixer for cathode injection.	200 mc	6BH6	250/1	6.3/150	SE/1½"	4.15
MX-3	Pentigrid converter		6BE6		6.3/300	SE/1"	4.15
MX-4	High level mixer for SSB	30 mc	6BA7	250/10	6.3/300	SE/1½"	7.95

multipliers

CATALOG NO.	DESCRIPTION	MAX FREQ RECOMMENDED	TUBE	PLATE VOLTS/MA	FILAMENT VOLTS/MA	MOUNTING	PRICE
MU-1	RF Frequency Multiplier. Recommended for doubling or tripling.	200 mc	6DS4	250/11	6.3/135	SE/1"	$3.40
MU-2	RF Frequency Multiplier. ½ watt output	150 mc	12BY7A	250/15	6.3/600	SE/1½"	3.80

Shipping weight: 1 to 5 units, 1 lb.

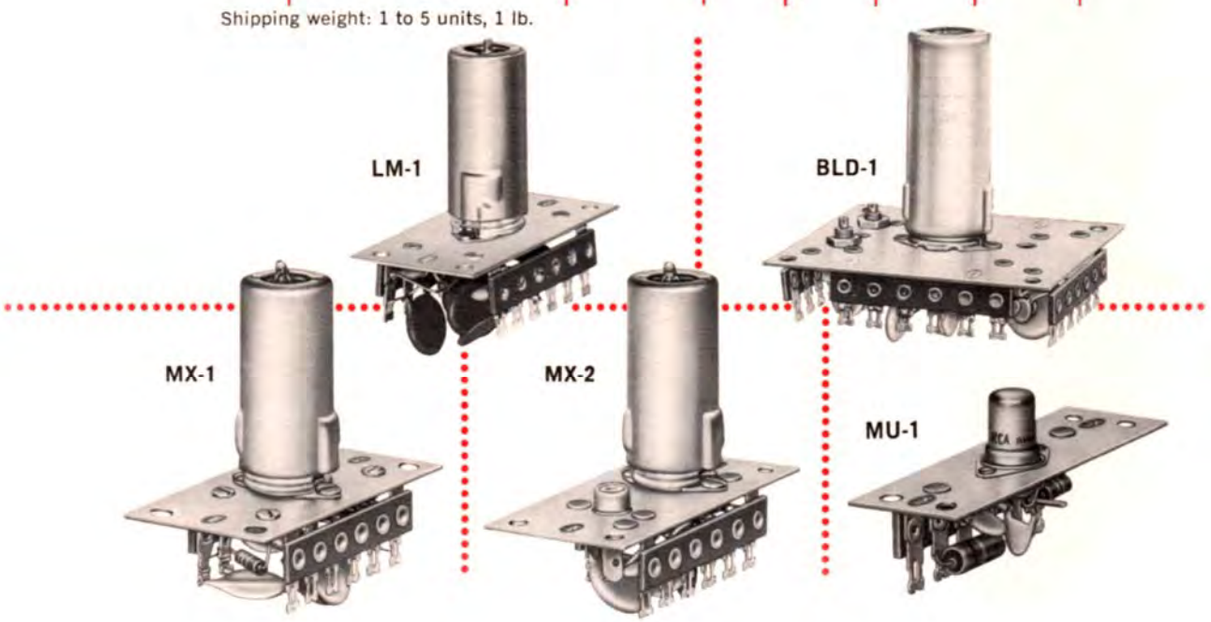

AOC

multivibrators

CATALOG NO.	DESCRIPTION	FREQUENCY	TUBE	PLATE VOLTS/MA	FILAMENT VOLTS/MA	MOUNTING	PRICE
MBR-1 cy	1 cy Multivibrator	1 cycle	12AT7	150 reg/5	6.3/300	SE/2"	$8.95
MBR-10 cy	10 cy Multivibrator	10 cycles	12AT7	150 reg/5	6.3/300	SE/2"	8.95
MBR-100 cy	100 cy Multivibrator	100 cycles	12AT7	150 reg/5	6.3/300	SE/2"	8.95
MBR-1 kc	1 kc Multivibrator	1 kc	12AT7	150 reg/5	6.3/300	SE/2"	8.95
MBR-10 kc	10 kc Multivibrator	10 kc	12AT7	150 reg/5	6.3/300	SE/2"	8.95
MBR-100 kc	100 kc Multivibrator	100 kc	12AT7	150 reg/5	6.3/300	SE/2"	8.95

oscillators, crystal (For use with CY-6 Crystals)

CATALOG NO.	DESCRIPTION	FREQ RANGE	TUBE	PLATE VOLTS/MA	FILAMENT VOLTS/MA	MOUNTING	PRICE
OS-1	Plate tuned oscillator requires coil plate of appropriate range.	To 60 mc	6DS4	250/5	6.3/135	SE/1½"	$4.15
OS-2	Electron coupled, oscillating crystal between grid and screen. Uses fundamental cut crystal. Tuned circuit may be added in plate for doubling.	200 kc to 20,000 kc	6BH6	250/5	6.3/150	SE/1½"	4.15
OS-3	Modified Colpitts Crystal Oscillator. Use fundamental cut crystal. Tuned circuit may be added in plate for doubling.	2 mc to 15 mc	12BY7A	250/12	6.3/600	SE/2"	4.35
OS-4	Electron coupled oscillating crystal between grid and screen. With trimmer capacitor for zero adjustment of frequency.	80 kc to 10,000 kc	6BH6	250/5	6.3/150	SE/1½"	6.95
OS-5	VFO with tuning capacitor and dial and panel scale.	8 mc to 9 mc	6BH6, OB2	250/15	6.3/150	SE/2"	14.95
OS-42	Similar to OS-4 but contains two crystal sockets and switch for selecting either crystal. Individual trimmers for exact adjustment of each crystal. Uses CY-6 type crystal.						8.95

Shipping weight: 1 to 5 units, 1 lb.

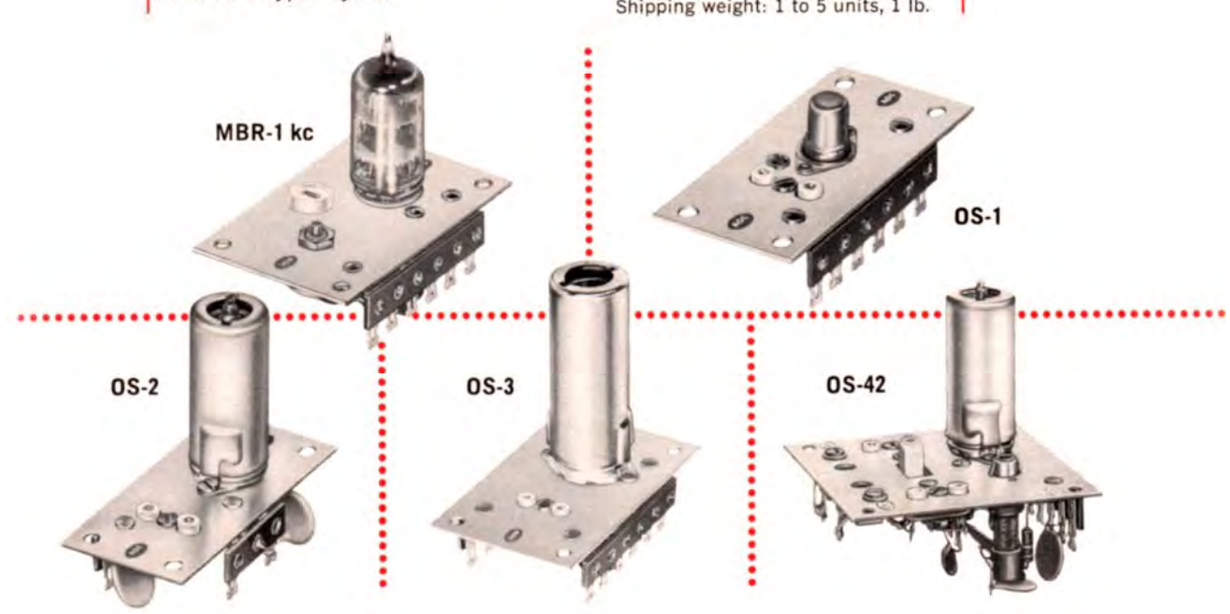

INTERNATIONAL

AOC

ovens, crystal

CATALOG NO.	DESCRIPTION	HEATER VOLTS/AMP	MOUNTING	PRICE
OV-1	Oven houses two CY-6 crystals. Operating temperature 85° C. Complete with plate and socket.	6.3/1.5	SE/2"	$8.50

plates

CATALOG NO.	DESCRIPTION	MOUNTING	PRICE
PL-1	AOC plate with 7-pin tube socket and terminal strip for building your own circuit.	SE/1½"	$1.50
PL-2	AOC plate with one nuvistor socket and terminal strip for building your own circuit.	SE/1"	1.50
PLB	Blank ½" plate for case fillers. Pkg. of 4.	SE/½"	1.35
PLB-A	Blank plate assortment consisting of two each 1", 1½" and 2" plates with hardware.		2.95
PLB-1	Four 1" blank plates with hardware.		2.25
PLB-1.5	Two 1½" blank plates with hardware.		1.95
PLB-2	Two 2" blank plates with hardware.		2.25
PLO	Octal socket plate and terminal strip.		1.95

potentiometer

CATALOG NO.	DESCRIPTION	PRICE
P-1M	1 meg ½ watt control with flat panel mounting.	$1.95

Shipping weight: 1 to 5 units, 1 lb.

regulator, voltage

CATALOG NO.	DESCRIPTION	TUBE	MOUNTING	PRICE
ARG-1	150V regulator with resistor	OA2	SE/1½"	$2.60

squelch, audio amplifier

CATALOG NO.	DESCRIPTION	MAX FREQ RECOMMENDED	TUBE	PLATE VOLTS/MA	FILAMENT VOLTS/MA	MOUNTING	PRICE
SQ-1	Squelch circuit with amplifier	Audio	7199	250/5	6.3/.45	SE/2"	$5.95

terminals

CATALOG NO.	DESCRIPTION	MOUNTING	PRICE
PO-1	Three dual plug-on jacks mounted on plate with tie strip. Comes with three power leads—connectors attached on one end. For use in connecting power or high level audio.	SE/1½"	$1.95
PO-2	1½" plate with power connecting terminal strip. Fits wire end plugs.		1.65
PC-1	Phono jack on 1" plate for use with RF or audio.	SE/1"	1.05

Shipping weight: 1 to 5 units, 1 lb.

OV-1

PL-1

PL-2

ARG-1

SQ-1

PLB

PLB-A

PL-O

P-1M

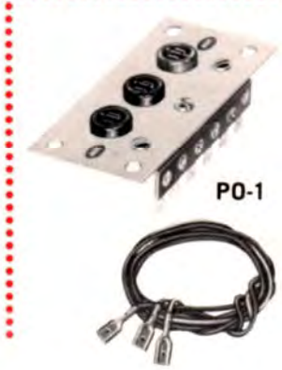
PO-1

PO-2

PC-1

transformers, audio

CATALOG NO.	DESCRIPTION	MAX. FREQ. RECOMMENDED	MOUNTING	PRICE
TA-2	Output universal, single plate to 3 ohm speaker, 2 watt.		SE/2"	$2.70
TA-3	Mod. and out Trans. 3 watt Pri 9,000 ohm tap 4,000 ohm. Sec. 3-4 ohm	400-4,000 cps	SE/2"	2.70
TA-5	Pri 5,000 ohm Sec. #1 10,000 ohm Sec. #2 3-4 ohm Mod. and Out Trans. 5 watt	400-4,000 cps	SE/2"	4.80
TA-10N	Single Plate to PP Grid Driver Trans. Class B for use with (AD-04 to AP-10)	400-4,000 cps	SE/2"	2.70
TA-10T	12K PP Plate to 5,000 ohm Mod. Trans. 10W for use with (AP-10)	400-4,000 cps	SE/2"	5.70

transformers, if

CATALOG NO.		MOUNTING	PRICE
IF-45	455 kc interstage or output for AM signals. Use with detector DE-1.	SE/1½"	$1.45
IF-45D	455 kc Discriminator 30 kc peaks, for use with DE-4.	SE/1"	1.95
IF-107	10.7 mc Interchange for FM signal.	SE/1½"	1.45
IF-107R	10.7 mc Ratio Detector Transformer. Use with detector DE-5.	SE/1½"	1.95
IF-45LC	IF transformer for low impedance input or output. Coupling 455 kc. 1½" mounting.		1.75
IF-17	1,700 kc IF, interstage or output.		1.45

Shipping weight: 1 to 5 units, 1 lb.

TA-2

IF-45

IF-107

TA-ION

IF-107R

IF-45LC

a few words about citizens radio

THE BASIC RULES

The selection of equipment, its operation and the knowledge of a few basic rules of the Citizens Radio Service is as important to the person planning an installation as a veteran licensee.

The Citizens Radio Service is intended to provide short range communication to meet the business and personal needs of a large segment of the public. You may operate a Citizens Radio station on any authorized frequency in the 26.96-27.23 mc frequency band, or on the frequency 27.255 mc with an authorized plate input power of 5 watts or less for radio-telephone (voice) communication. In general, all users of Citizens Radio equipment are required to obtain their own call signs. Thus, except in the case of a station used solely for the control of certain remote objects or device by radio, a Citizens Radio station may be operated only by the licensee, by members of the immediate family living in the same household, or by employees of the licensee acting within the scope of their employment.

HOW TO APPLY FOR A LICENSE

Eligibility for a station license does not require an examination on the part of the applicant. Requirements are basically simple. The applicant must be eighteen years or more of age and a citizen of the United States. No examination is required. A fee of $8.00 is charged for a 5 year license. Formal application for a Class D station license is made on FCC Form 505 which is submitted to the Commission's office at 334 York Street, Gettysburg, Pennsylvania. Copies of the form may be obtained by writing the FCC or International Crystal.

All applicants and licensees should have a current copy of FCC Rules and Regulations (Part 95).

Elsewhere in this catalog are various International transceivers and accessories which have been designed for mobile and/or fixed station installations.

SELECTING THE ANTENNA

An important part of the Citizens Radio installation is a good antenna. The most common antenna for Citizens use are the ground plane and coaxial for base use and the vertical whip for mobile use.

It is best to purchase a good commercially built antenna rather than attempt to construct your own. Good commer-

cial antennas have a low SWR (standing wave ratio) which is a merit of the radiation efficiency. An antenna should have an SWR of not more than 2:1.

For extreme short range communication (less than one mile) the base loaded case whip antenna works very well. The outside antenna is by far the best choice and should be mounted as high as practical and still be within FCC regulations. In brief, the FCC limits antenna height to no more than 20 feet above an existing structure. A little thought in antenna installation will greatly improve your coverage.

The direct coverage you are able to obtain using Citizens equipment in the 27 megacycle band will depend a great deal on the antenna. To repeat . . . the FCC has intended the Citizens use to be for short range communication and all installations should be calculated on this basis. Charts #1 and #2 below consider a base station antenna mounted on a mast with the calculated range to a mobile unit using an International mobile antenna.

Note how the distance increases with the increased height of the antenna for a given installation as in chart 1. This chart is based on a 2 microvolt signal at the receiver. This signal will not be sufficient for many city areas where high levels of noise exists. Chart 2 converts the coverage for 15 microvolts at the receiver and is more practical for general city use.

Space prohibits a detailed description of each and every installation. Your dealer or International Crystal Mfg. Co. solicits your questions. We might point out that most installations are relatively simple. A fairly comprehensive operation and maintenance manual is supplied with each International transceiver which covers the area on installation both for mobile and base station operation.

The International line of Citizens Band equipment in this catalog is manufactured to the highest standards and is designed to give you years of practically trouble free service.

chart #1 Ground Plane or Coax Antenna For 2 Microvolts at Receiver

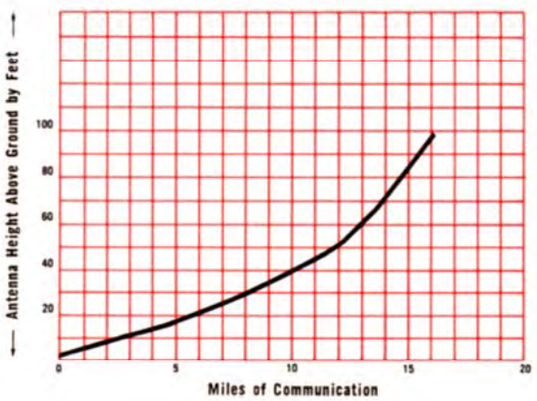

chart #2 Ground Plane or Coax Antenna For 15 Microvolts at Receiver

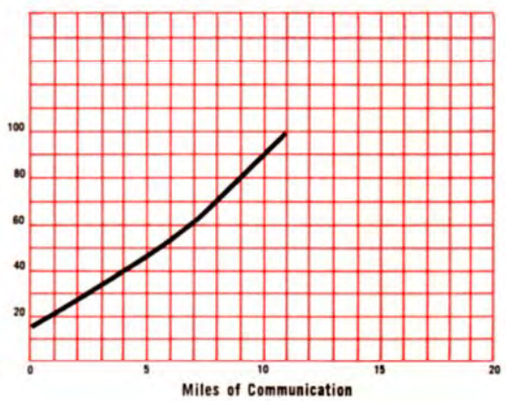

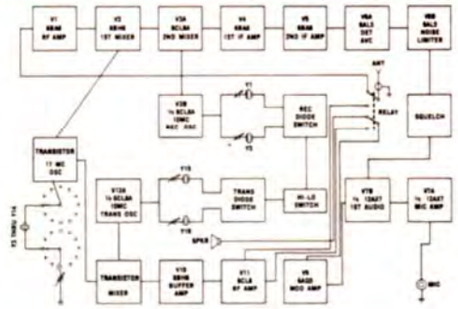

INTERNATIONAL

MODEL 440

citizens radio transceiver

The Model 440 brings a distinctive new panel and engineering design to the line of International Citizens Radio Transceivers.

This transceiver features a hybrid circuit in the transmitter-receiver oscillator section which combines both silicon transistors and tubes for optimum performance. A Zener speech limiter is incorporated in the transmitter section.

The International Model 440 combines a sensitive and selective dual conversion receiver with a highly stable and efficient crystal controlled transmitter. A frequency synthesizer is provided for the selection of any one of the 23 citizens band channels. A squelch circuit provides receiver quieting during periods when no signal is being received.

The illuminated 12 position channel selector permits the operator to instantly select the desired channel in two ranges. With the HI-LO switch in the LO position, channels 1 through 12 are selected. With the switch in the HI position, channels 13 through 23 are selected.

The Model 440 has a transistor power supply and will operate from 6/12 and 115 vac power sources. The set is normally supplied with the plug-in AC power cord.

The unit may be used for fixed station or portable installations.

SPECIFICATIONS

Receiver: Tuning Range, crystal controlled any channel, 1 through 23. Sensitivity, usable to .5 microvolts. Selectivity, 50 db down at 10 kc, 60 db down at 20 kc. Image Rejection, better than 50 db down. Audio Output, 2.5 watts into 4-6 ohms. Speaker Impedance, 4-6 ohms. Squelch Range, .5 to 20,000 microvolts. On-Off differential is approximately 1 microvolt, at 5 microvolt input. Noise Limiter, automatic, series-gate. **Transmitter:** Tuning Range, crystal controlled any channel, 1 through 23. Frequency Stability, ± .005% @ 0° to 125° F, when used with International high stability crystals. RF Power Input, 5 watts maximum (FCC rules). Modulation capability, 100%. Power Consumption: Transmitting, 65 watts (approximately). Microphone: High Impedance, dynamic type with (push-to-talk switch). **Tube Complement:** 6BA6 RF amp, 6BH6 1st mixer, ½ 6CL8A 2nd mixer, ½ 6CL8A rec osc, 6BA6 1st IF amp, 6BA6 2nd IF amp, ½ 6AL5 det-avc, ½ 6AL5 noise limiter, 6BH6 buffer amp, 6CL6 RF amp, 6AQ5 mod amp, ½ 12AX7 1st audio, ½ 12AX7 mic amp. **Transistors:** 5 silicon transistors in frequency generator. Two power transistors in power supply, plus 11 silicon diodes.

Model 440 complete with crystals, dynamic microphone with coil cord. 115 vac power cord, Shipping Weight: 20 lbs.

Cat. No. 600-126 ..... $245.00

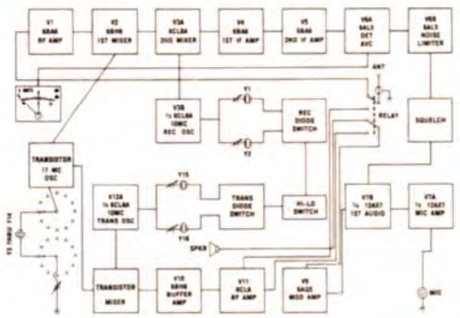

INTERNATIONAL

MODEL 660

citizens radio transceiver

The International Model 660, designed for base and mobile installations, provides instant push-to-talk crystal controlled operation on all 23 channels. The illuminated 12 position channel selector dial permits the operator to select the desired channel in two ranges. Set the HI-LO switch in the LO position for selecting channels 1-12. In the HI position channels 13-23 are selected.

The Model 660 combines a sensitive and selective dual conversion receiver with a highly stable and efficient crystal controlled transmitter. A squelch circuit is built-in to provide receiver quieting during periods when no signal is being received.

This transceiver features a hybrid circuit in the transmitter-receiver oscillator section which combines both silicon transistors and tubes for optimum performance. A Zener speech limiter is incorporated in the transmitter section.

The attractive panel includes on-off and volume switch, indicator lights, S/meter, squelch control, illuminated channel selector dial, microphone connection and speaker grill.

A transistor power supply operates from 6/12 vdc and 115 vac power sources.

SPECIFICATIONS

Receiver: Tuning Range, crystal controlled any channel, 1 through 23. Sensitivity, usable to .5 microvolts. Selectivity, 50 db down at 10 kc, 60 db down at 20 kc. Image Rejection, better than 50 db down. Audio Output, 2.5 watts into 4-6 ohms. Speaker Impedance, 4-6 ohms. Squelch Range, .5 to 20,000 microvolts. On-Off differential is approximately 1 microvolt, at 5 microvolt input. Noise Limiter, automatic, series-gate. **Transmitter:** Tuning Range, crystal controlled any channel, 1 through 23. Frequency Stability, ± .005% @ 0° to 125° F, when used with International high stability crystals. RF Power Input, 5 watts maximum (FCC rules). Modulation capability, 100%. Power Consumption: Transmitting, 65 watts (approximately). Microphone: High Impedance, dynamic type with (push-to-talk switch). **Tube Complement:** 6BA6 RF amp, 6BH6 1st mixer, ½ 6CL8A 2nd mixer, ½ 6CL8A rec osc, 6BA6 1st IF amp, 6BA6 2nd IF amp, ½ 6AL5 det-avc, ½ 6AL5 noise limiter, 6BH6 buffer amp, 6CL6 RF amp, 6AQ5 mod amp, ½ 12AX7 1st audio, ½ 12AX7 mic amp. **Transistors:** 5 silicon transistors in frequency generator. Two power transistors in power supply, plus 11 silicon diodes.

Model 660 complete with crystals, dynamic microphone with coil cord. 115 vac power cord. Shipping Weight: 20 lbs.

Cat. No. 600-127 ..... $265.00

INTERNATIONAL

MODEL 50-AN

citizens radio transceiver

The Model 50-AN is designed for mobile or base operations. A single panel switch offers selection of two crystal controlled receiving positions or continuous tuning of a dual conversion superheterodyne receiver covering all 23 channels. The transmitter using fixed bias, features switch selection of three crystal controlled transmit channels. Ignition interference, is minimized by series-gate noise limiter. International NR squelch silences the receiver during "standby." Three way transistor power supply for 6/12 vdc or 115 vac. Covered relay. Certified tolerance ± .005%.

SPECIFICATIONS

Receiver: Tuning Range, 26.955 to 27.235 mc, (class D) manual tuning Citizens Band channels 1 through 23. Tuning Range, crystal controlled any channel, 1 through 23. (Selector Pos. 2). Tuning Range, crystal controlled any channel, 1 through 23. (Selector Pos. 3). Sensitivity, usable to .5 microvolts. Selectivity, 50 db down at 10 kc, 60 db down at 20 kc. Image Rejection, better than 50 db down. Audio Output, 2.5 watts into 4-6 ohms. Speaker Impedance, 4-6 ohms. Squelch Range, 5 to 50,000 microvolts. On-Off differential approximately 1 microvolt, at 5 microvolt input.

Transmitter: Stability: ± .005% RF Power Input, 5 watts maximum. Modulation, 100% capability. Crystals: International, high stability, fundamental type, one-half the desired frequency. **Tube Complement:** 6BA6 RF amplifier, ½ 6CL8A first mixer, ½ 6CL8A second oscillator, 6BA6 IF amplifier, 6AL5 detector AVC, 6AL5 noise limiter, 6BH6 oscillator, 6CL6 RF amplifier, 6AQ5 modulator amplifier, ½ 12AX7 first audio, ½ 12AX7 microphone amplifier. Microphone: Dynamic. Dimensions: 5½" H x 8½" W x 9" D. Weight: 12 lbs. Power Consumption: Transmit 65 watts (maximum). Receive 60 watts (maximum).

Complete with 1 Channel 9 crystal, microphone, 115 vac power cable.

Shipping weight: 18 lbs.

Cat. No. 600-130 ..... $172.50

Exec MODEL 59N

citizens radio transceiver

The Model 59N International Exec introduces a new series of Citizens Radio transceivers. The Exec provides equally efficient operation in a car, plane, boat, or other mobile and portable installations. It may be used with a variety of antennas including regular or base loaded whip, ground plane, beam, etc. A transistor power supply operates from 6/12 vdc or 115 vac power sources. Nine receiving and nine transmitting crystal sockets are provided for the selection of any desired channel. Built-in squelch circuit. Panel controls include On-Off switch and volume control, squelch and illuminated channel selector. Transmit and receive indicator lamps. Transistor power supply. Push-to-talk.

SPECIFICATIONS

Receiver: Tuning Range, (9 positions) crystal controlled on any channel 1 through 23. (For which crystal has been installed). Sensitivity, usable to .5 microvolts. Selectivity, 50 db down at 10 kc, 60 db down at 20 kc. Image Rejection, better than 50 db down. Audio Output, 2.5 watts into 4-6 ohms. Speaker Impedance, 4-6 ohms. Squelch Range, .5 to 20,000 microvolts. Noise Limiter, automatic series-gate.
Transmitter: Crystal controlled any channel, 1 through 23. (For which crystals have been installed). Frequency Stability, ± .005% @ 0° to 125° F. RF Power Input, 5 watts maximum. Modulation capability 100%. **Tube Complement:** 6BA6 RF amplifier, ½ 6CL8A first mixer, ½ 6CL8A first oscillator, ½ 6CL8A second mixer, ½ 6CL8A second oscillator, 6BA6 IF amplifier, 6AL5 detector avc, 6AL5 noise limiter, 6BH6 oscillator, 6CL6 IF amplifier, 6AQ5 modulation amplifier, ½ 12AX7 first audio, ½ 12AX7 microphone amplifier. Crystals Required: Transmitter — International 'TM' high stability, fundamental type, at one-half the desired frequency. Receiver — International Type 'RM'. Dimensions: 5½" H x 8½" W x 9" D.

Complete with 1 channel 9 transmit crystal and 1 channel 9 receive crystal, dynamic microphone, 115 vac power cable.

Shipping weight: 18 lbs.

Cat. No. 600-129 ..... $172.50

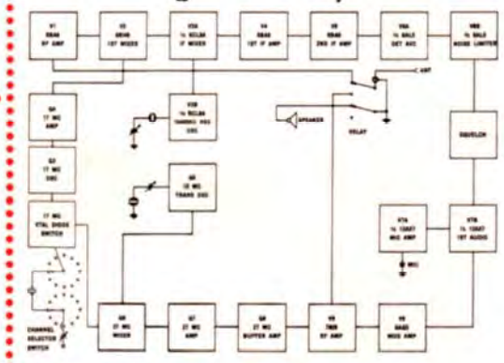

INTERNATIONAL

MODEL MO-23

citizens radio transceiver

The International Model MO-23, designed for mobile installation, provides push-to-talk crystal controlled operation on all 23 channels. The illuminated 12 position channel selector permits the operator to instantly select the desired channel in two ranges. Set the HI-LO switch in the LO position for channels 1 - 12. In the HI position channels 13-23 are selected. All crystals necessary for complete 23 channel coverage are installed in the transmit-receive unit.

The Model MO-23 control head is completely remote controlled and requires a minimum of mounting space. All circuits are dc controlled using solid state crystal switching. Channel switching, volume and squelch controls are located on the control head.

The Model MO-23 combines the best advantages of tubes and silicon transistors to provide a rugged trouble-free circuit.

The receiver is a sensitive and selective dual conversion circuit. The squelch circuit provides receiver quieting during periods when no signal is being received, yet will open with as little as .1 microvolt.

Frequency adder circuits eliminate the use of two crystals (one-transmit and one-receive) for each channel. One crystal provides both circuits. Hybrid circuits in the transmitter and receiver oscillator section combine both tubes and silicon transistors. The only tube used in the transmitter is a quick-heat type thereby reducing standby battery drain. Transistor control of this heater circuit provides instant warm-up. The tube amplifier is non-critical of load and no damage will occur as a result of operating the transmitter without the proper load. This is not true of circuits using transistors in the stage. A Zener speech limiter is incorporated in the transmitter section. The transistor power supply operates from 12 vdc negative ground power source.

SPECIFICATIONS

Receiver: Tuning Range, crystal controlled 23 channels. Sensitivity, usable to .1 microvolts. Selectivity, 50 db down at 10 kc, 60 db down at 20 kc. Image Rejection, better than 50 db down. Audio Output, 2.5 watts into 4-6 ohms. Speaker Impedance, 4-6 ohms. Squelch Range, .5 to 20,000 microvolts. On-Off differential is approximately 1 microvolt, at 5 microvolt in-put. Noise Limiter, automatic, series-gate. **Transmitter:** Tuning Range, crystal controlled 23 channels. Frequency Stability, ± .005% @ 0° to 125° F, when used with International high stability crystals. RF Power Input, 5 watts maximum (FCC rules). Modulation capability, 100%. **Power Consumption:** Transmitting, 50 watts (approximately). **Microphone:** High Impedance, dynamic type with (push-to-talk switch). **Tube Complement:** 12EK6 RM amp, 12EK6 1st mixer, 12EK6 2nd mixer, 6BA6 1st IF amp, 6BA6 2nd IF amp, ½/12AL5 det-avc, ½/12AL5 noise limiter, 7905 RF amp, 6AQ5 mod amp, ½ 12AX7 1st audio, ½ 12AX7 mic amp. **Transistors:** 6 silicon transistors in frequency generator. Two power transistors in power supply, one power transistor in filament control plus 18 silicon diodes.

Model MO-23 complete with crystals for 23 channels, dynamic microphone, remote control head, transmit-receive unit, mounting brackets, 17′ connecting cable, speaker.

Shipping weight: 20 lbs.

Cat. No. 600-132 ..... **$245.00**

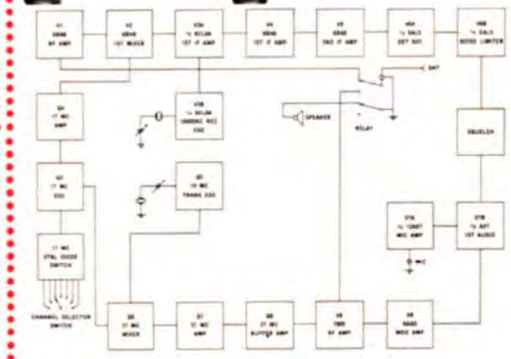

INTERNATIONAL

MODEL MO

citizens radio transceiver

The International Model MO, designed for mobile installation, provides instant push-to-talk crystal controlled operation on any 6 channels. The Model MO control head is completely remote controlled and requires a minimum of mounting space. All circuits are dc controlled using solid-state crystal switching and photo-control of the volume circuit. The operating channel is indicated by an illuminated button on the control head. Channel switching, volume and squelch controls are readily available on the control head. The Model MO combines the best advantage of tubes and silicon transistors to provide a rugged trouble-free circuit. The receiver is a sensitive and selective dual conversion circuit. Two AGC circuits provide a maximum of signal control, allowing full sensitivity for weak signals plus delayed and multiplied control of extremely strong signals. The squelch circuit provides receiver quieting during periods when no signal is being received, yet will open with as little as .1 microvolt.

Frequency adder circuits eliminate the use of two crystals (one-transmit and one-receive) for each channel. One crystal provides both circuits. Hybrid circuits in the transmitter and receiver oscillator section combine both tubes and silicon transistors. The only tube type thereby reducing standby battery used in the transmitter is a quick-heat drain. Transistor control of this heater circuit provides instant warm-up. The tube amplifier is non-critical of load and no damage will occur as a result of operating the transmitter without the proper load. This is not true of circuits using transistors in the stage. A Zener speech limiter is incorporated in the transmitter section.

The transistor power supply operates from 12 vdc negative ground power source. Other power input units are available on special order.

SPECIFICATIONS

Receiver: Tuning Range, crystal controlled six channels. Sensitivity, usable to .1 microvolts. Selectivity, 50 db down at 10 kc, 60 db down at 20 kc. Image Rejection, better than 50 db down. Audio Output, 2.5 watts into 4-6 ohms. Speaker Impedance, 4-6 ohms. Squelch Range, .5 to 20,000 microvolts. On-Off differential is approximately 1 microvolt, at 5 microvolt in-put. Noise Limiter, automatic, series-gate. **Transmitter:** Tuning Range, crystal controlled any six channels. Frequency Stability, ± .005% @ 0° to 125° F, when used with International high satbility crystals. RF Power Input, 5 watts maximum (FCC rules). Modulation capability, 100%. **Power Consumption:** Transmitting, 50 watts (approximately). **Microphone:** High Impedance, dynamic type with (push-to-talk switch). **Tube Complement:** 7BA6 RM amp, 6BH6 1st mixer, ½ 6CL8A 2nd mixer, ½ 6CL8A rec osc, 6BA6 1st IF amp, 6BA6 2nd IF amp, ½ 6AL5 det-avc, ½ 6AL5 noise limiter, 7905 RF amp, 6AQ5 mod amp, ½ 12AX7 1st audio, ½ 12AX7 mic amp. **Transistors:** 6 silicon transistors in frequency generator. Two power transistors in power supply, one power transistor in filament control plus 18 silicon diodes.

Model MO complete with channel 9 crystal, dynamic microphone with coil cord.

Shipping Weight: 20 lbs.

Cat. No. 600-131 ..... **$199.50**

MMR-1 mobile
mounting rack

Designed for under-dash mounting International Executive Model 100, and Model 50, Citizens Band transceivers. Hardware and instructions included. Shipping weight: 3 lbs.

Cat. No. 150-115 ..... $9.95

CITIZENS RADIO
accessories

THREE POSITION
coax switch

Compact switch for switching to three different antennas. Dimensions 3¼"W × 2¼"H × 1½"D. Rubber feet. Can be installed on top of receiver or on desk for convenience in selecting proper antenna. Requires PL-259 connectors on cables. Shipping weight: 2 lbs.

Cat. No. 100-112 ..... $7.50

6, 12, 115 Volt
power cords for transceivers

International power cords are designed for quick change from one power source to another. A special socket fits 18-prong power connector on International Citizens Radio transceiver. Note that cords are specially wired for 6, 12 vdc (negative or positive ground) or 115 vac. Specify catalog number when ordering. Shipping weight: 2 lbs.

WIRED AND TESTED

VIBRATOR	
6 vdc Cat. No. 150-118	$7.50
12 vdc Cat. No. 150-119	7.50
115 vac (early model) Cat. No. 150-120	7.50
115 vac (late model) Cat. No. 150-174	7.50
TRANSISTOR	
6 vdc (negative ground) Cat. No. 150-212	$7.50
6 vdc (positive ground) Cat. No. 150-213	7.50
12 vdc (negative ground) Cat. No. 150-214	7.50
12 vdc (positive ground) Cat. No. 150-215	7.50

POWER CORD ASSEMBLY KITS

AC Cord Cat. No. 150-192		$3.75
DC Cord Cat. No. 150-191		3.75
TYPE 750 SERIES		
6 vdc plug neg. gnd.	Cat. No. 150-259	$7.50
6 vdc plug pos. gnd.	Cat. No. 150-260	7.50
12 vdc plug neg. gnd.	Cat. No. 150-261	7.50
12 vdc plug pos. gnd.	Cat. No. 150-262	7.50
115 vac plug	Cat. No. 150-174	7.50
AC or DC plug kit	Cat. No. 150-257	3.95
AC jumper plug	Cat. No. 150-267	3.50
DC jumper plug	Cat. No. 150-268	3.50

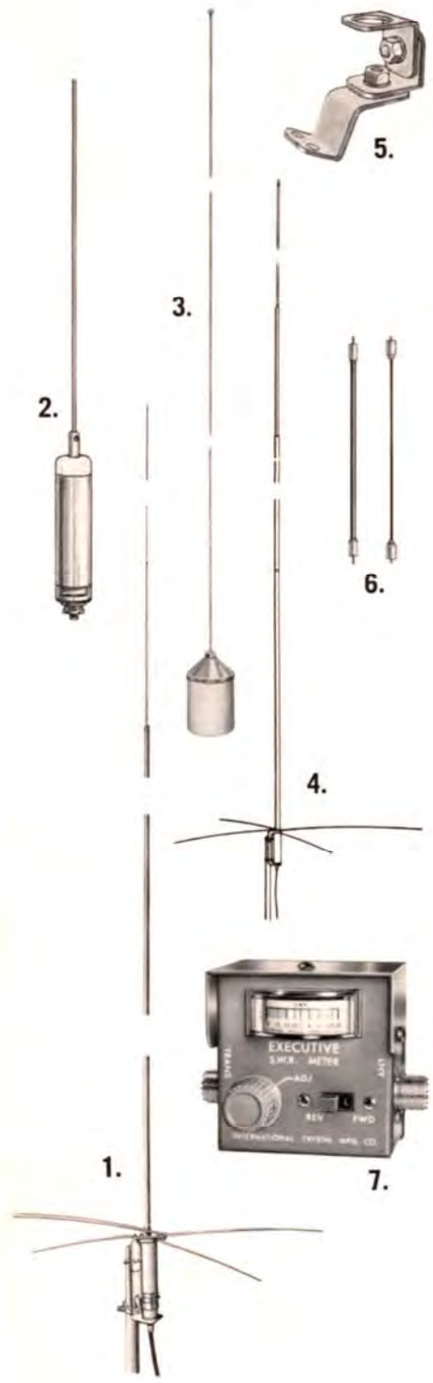

CITIZENS RADIO
antennas

1. LOW ANGLE 'T-BAR' VERTICAL

This antenna has two important features. One is the low angle of radiation to provide more reliable contacts. The second is the 'T-Bar' tuner which permits adjustment for the lowest S.W.R. on any Citizens Radio channel. Shipping weight: 10 lbs.

Cat. No. 160-133 ..... $35.00

2. AUTO ROOF

Base loaded whip antenna for installation on roof of automobile or truck. Sealed loading coil. Covers all 23 channels. Low S.W.R. Fits ¾" hole. Antenna assembly complete with mounting hardware. Easy to install. Shipping weight: 3 lbs.

Cat. No. 160-119 ..... $12.00

3. AUTO ROOF/LOW PROFILE COIL

Base loaded whip antenna for installation on roof of automobile or truck. Sealed loading coil. Operates all 23 channels. Fits ¾" hole. Complete with mounting hardware. Shipping weight: 3 lbs.

Cat. No. 160-134 ..... $24.00

4. BASE STATION VERTICAL

This antenna offers exceptional improvement of signal to noise ratio. Shunt fed, grounded radiator. Four shortened radials provide RF decoupling for transmission line. Rigid aluminum and cadmium plated steel construction. Shipping weight: 10 lbs.

Cat. No. 160-116 ..... $22.80

5. BLIND MOUNTING BRACKET

Heavy metal bracket mounts on lip of trunk opening without visible holes in outside surface of automobile body. Adjustable in two directions. Holds auto roof type (Cat. No. 160-119) antenna. Shipping weight: 2 lbs.

Cat. No. 160-126 ..... $ 2.95

6. COAX CABLES

Coax cables (RG-8/U) for connecting transceiver to antenna. Supplied complete with fittings. Ready to use.

CL-30 (30') Shipping weight: 5 lbs.
Cat. No. 160-110 ..... $ 7.50

CL-50 (50') Shipping weight: 8 lbs.
Cat. No. 160-111 ..... 12.50

CL-75 (75') Shipping weight: 12 lbs.
Cat. No. 160-112 ..... 15.00

7. INTERNATIONAL S.W.R. METER

Checks efficiency of mobile or base station antenna systems by measuring forward and reflected power or standing wave ratio. May be installed permanently in the transmission line. Dimensions: 2⅝" x 3⅛" x 1⅞". Maximum Power: 5 watts. Matches 50 ohm line. Shipping weight: 2 lbs.

Cat. No. 150-220 ..... $19.50